PIONEER®
The Art of Entertainment

# Service Manual

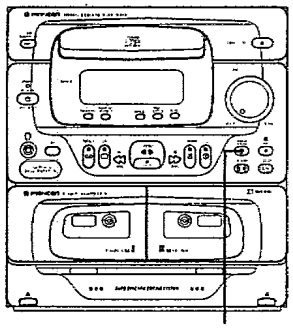

(DEMO)

ORDER NO.
RRV1271

## STEREO CD CASSETTE DECK RECEIVER

# XR-P150

**THIS MANUAL IS APPLICABLE TO THE FOLLOWING MODEL(S) AND TYPE(S).**

| Type | Model | Power Requirement | The voltage can be converted by the following method. |
|---|---|---|---|
| | XR−P150 | | |
| NBXK | ○ | AC230V | —— |
| MEXK/EA | ○ | AC220V−230V | —— |
| MEXK/EB | ○ | AC220V−230V | —— |
| SD | ○ | AC110−115V/120−127V/220−230V/240V | With the voltage selector |

● **For the circuit and mechanism descriptions, refer to the service guide RRV1301 for XR−P150.**

## CONTENTS


1. SAFETY INFORMATION ····· 2
2. EXPLODED VIEWS, PACKING AND PARTS LIST ····· 4
3. SCHEMATIC AND PCB CONNECTION DIAGRAMS ····· 16
4. PCB PARTS LIST ····· 37
5. ADJUSTMENTS ····· 41
6. IC INFORMATION ····· 56
7. FL INFORMATION ····· 59
8. FOR MEXK/EA, MEXK/EB AND SD TYPES ····· 61
9. PANEL FACILITIES ····· 64
10. SPECIFICATIONS ····· 66



**PIONEER ELECTRONIC CORPORATION** 4-1, Meguro 1-Chome, Meguro-ku, Tokyo 153, Japan
**PIONEER ELECTRONICS SERVISE INC.** P.O. Box 1760, Long Beach, California 90801, U.S.A.
**PIONEER ELECTRONICS OF CANADA, INC.** 300 Allstate Parkway Markham, Ontario L3R 0P2, Canada
**PIONEER ELECTRONIC [EUROPE] N.V.** Haven 1087 Keetbergiaan 1, 9120 Melsele, Belgium
**PIONEER ELECTRONICS AUSTRALIA PTY. LTD.** 178-184 Boundary Road, Braeside, Victoria 3195, Australia, TEL: [03] 580-9911


© *PIONEER ELECTRONIC CORPORATION 1995*


T−DFK MAR. 1995 Printed in Japan

# 1. SAFETY INFORMATION

**This service manual is intended for qualified service technicians; it is not meant for the casual do-it-yourselfer. Qualified technicians have the necessary test equipment and tools, and have been trained to properly and safely repair complex products such as those covered by this manual.**
**Improperly performed repairs can adversely affect the safety and reliability of the product and may void the warranty. If you are not qualified to perform the repair of this product properly and safely, you should not risk trying to do so and refer the repair to a qualified service technician.**

WARNING
Lead in solder used in this product is listed by the California Health and Welfare agency as a known reproductive toxicant which may cause birth defects or other reproductive harm (California Health & Safety Code, Section 25249.5).
When servicing or handling circuit boards and other components which contain lead in solder, avoid unprotected skin contact with the solder. Also, when soldering do not inhale any smoke or fumes produced.

NOTICE
(FOR CANADIAN MODEL ONLY)
Fuse symbols (fast operating fuse) and/or (slow operating fuse) on PCB indicate that replacement parts must be of identical designation.

REMARQUE
(POUR MODÈLE CANADIEN SEULEMENT)
Les symboles de fusible (fusible de type rapide) et/ou (fusible de type lent) sur CCI indiquent que les pièces de remplacement doivent avoir la même désignation.

(FOR USA MODEL ONLY)

## 1. SAFETY PRECAUTIONS

The following check should be performed for the continued protection of the customer and service technician.

### LEAKAGE CURRENT CHECK

Measure leakage current to a known earth ground (water pipe, conduit, etc.) by connecting a leakage current tester such as Simpson Model 229-2 or equivalent between the earth ground and all exposed metal parts of the appliance (input/output terminals, screwheads, metal overlays, control shaft, etc.). Plug the AC line cord of the appliance directly into a 120V AC 60 Hz outlet and turn the AC power switch on. Any current measured must not exceed 0.5 mA.

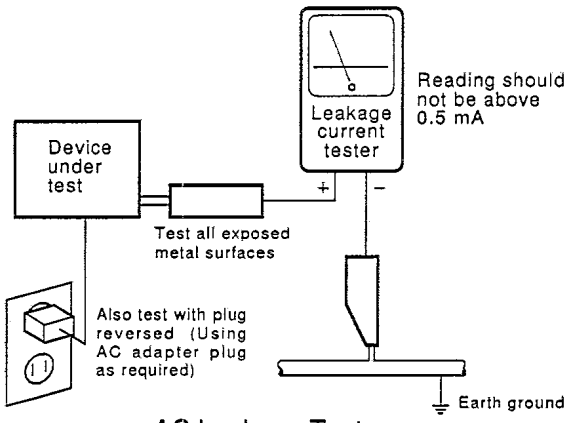


AC Leakage Test

**ANY MEASUREMENTS NOT WITHIN THE LIMITS OUTLINED ABOVE ARE INDICATIVE OF A POTENTIAL SHOCK HAZARD AND MUST BE CORRECTED BEFORE RETURNING THE APPLIANCE TO THE CUSTOMER.**

## 2. PRODUCT SAFETY NOTICE

Many electrical and mechanical parts in the appliance have special safety related characteristics. These are often not evident from visual inspection nor the protection afforded by them necessarily can be obtained by using replacement components rated for voltage, wattage , etc. Replacement parts which have these special safety characteristics are identified in this Service Manual.

Electrical components having such features are identified by marking with a ⚠ on the schematics and on the parts list in this Service Manual.
The use of a substitute replacement component which dose not have the same safety characteristics as the PIONEER recommended replacement one, shown in the parts list in this Service Manual, may create shock, fire, or other hazards.

Product Safety is continuously under review and new instructions are issued from time to time. For the latest information, always consult the current PIONEER Service Manual. A subscription to, or additional copies of, PIONEER Service Manual may be obtained at a nominal charge from PIONEER.

## (FOR EUROPEAN MODEL ONLY)

VARO !
AVATTAESSA JA SUOJALUKITUS OHITETTAESSA OLET ALTTIINA NÄKYMÄTTÖMÄLLE LASERSÄTEILYLLE. ÄLÄ KATSO SÄTEESEEN.

ADVERSEL:
USYNLIG LASERSTRÅLING VED ÅBNING NÅR SIKKERHEDSAFBRYDERE ER UDE AF FUNKTION UNDGÅ UDSAETTELSE FOR STRÅLING.

VARNING !
OSYNLIG LASERSTRÅLNING NÄR DENNA DEL ÄR ÖPPNAD OCH SPÄRREN ÄR URKOPPLAD. BETRAKTA EJ STRÅLEN.

LASER
Kuva 1
Lasersateilyn varoitusmerkki

WARNING !
DEVICE INCLUDES LASER DIODE WHICH EMITS INVISIBLE INFRARED RADIATION WHICH IS DANGEROUS TO EYES. THERE IS A WARNING SIGN ACCORDING TO PICTURE 1 INSIDE THE DEVICE CLOSE TO THE LASER DIODE.

IMPORTANT
THIS PIONEER APPARATUS CONTAINS LASER OF CLASS 1.
SERVICING OPERATION OF THE APPARATUS SHOULD BE DONE BY A SPECIALLY INSTRUTED PERSON.

LASER DIODE CHARACTERISTICS
MAXIMUM OUTPUT POWER: 5 mw
WAVELENGTH: 780 - 785 nm

LASER
Picture 1
Warning sign for laser radiation

## LABEL CHECK

MEXK/EA, MEXK/EB and NBXK types

CLASS 1
LASER PRODUCT
ARW1046

NBXK type

CAUTION
INVISIBLE LASER RADIATION WHEN OPEN, AVOID EXPOSURE TO BEAM
ARW1050

NBXK type

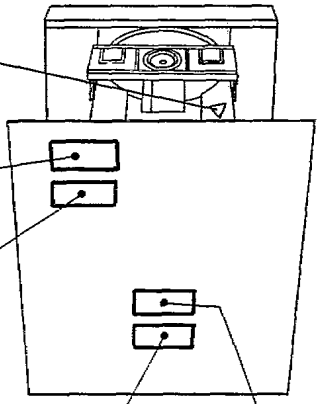

### Additional Laser Caution

1. Laser Interlock Mechanism
   The position of the switch (S601) for detecting loading state is detected by the system microprocessor, and the design prevents laser diode oscillation when the switch (S601) is not on $\overline{\text{CLMP}}$ terminal side ($\overline{\text{CLMP}}$ signal is OFF or high level.) Thus, the interlock will no longer function if the switch (S601) is deliberately set to $\overline{\text{CLMP}}$ terminal side. (low level)
   The interlock also does not function in the test mode*.
   Laser diode oscillation will continue, if pin 1 of M51593FP (IC101) on the PRE-AMP BOARD ASSY mounted on the pickup assembly is connected to GND, or pin 19 is connected to low level (ON), or else the terminals of Q101 are shorted to each other (fault condition).

2. When the cover is opened, close viewing of the objective lens with the naked eye will cause exposure to a Class 1 laser beam.

'92S1B

* Refer to page 48.

ADVARSEL
USYNLIG LASERTRÅLING VED ÅBNING NÅR SIKKERHED SAFBRYDERE ER UDE AF FUNKTION. UNDGÅ UDSÆTTELSE FOR STRÅLING.

VARO !
Avattaessa ja suojalukitus ohitettaessa olet alttiina näkymättömälle lasersäteilylle. Älä katso säteeseen.

VORSICHT !
UNSICHTBARE LASER-STRAHLUNG TRITT AUS, WENN DECKEL(ODER KLAPPE)GEÖFFNET IST! NICHT DEM STRAHL AUSSETZEN!

VARNING !
Osynlig laserstrålning när denna del är öppnad och spärren är urkopplad. Betrakta ej strålen.

ARW1047

MEXK/EA and MEXK/EB types

CLASS 1
LASER PRODUCT
ARW1046

MEXK/EA and MEXK/EB types

# 2. EXPLODED VIEWS, PACKING AND PARTS LIST

*NOTES :*

- *Parts marked by "NSP" are generally unavailable because they are not in our Master Spare Parts List.*
- *The ⚠ mark found on some component parts indicates the importance of the safety factor of the part. Therefore, when replacing, be sure to use parts of identical designation.*
- *Parts marked by "◉" are not always kept in stock. Their delivery time may be longer than usual or they may be unavailable.*

## 2.1 PACKING

| Mark | No. | Description | Parts No. |
|---|---|---|---|
| | 1 | FRONT PAD | AHA7054 |
| | 2 | REAR PAD | AHA7055 |
| | 3 | PACKING CASE | AHD7135 |
| | 4 | PACKING SHEET | AHG7001 |
| | 5 | FM ANTENNA ASSY | ADH1019 |
| | 6 | LOOP ANTENNA ASSY | ATB1012 |
| | 7 | REMOTE CONTROL UNIT (CU-XR015) | AXD7030 |
| | 8 | BATTERY COVER | AZA7050 |
| NSP | 9 | BATTERY (R03, AAA) | PEM1004 |
| | 10 | OPERATING INSTRUCTIONS (English) | ARB7033 |
| | 11 | QUICK SET UP GUIDE (English) | ARB7039 |
| | 12 | SPACER | AHB7006 |

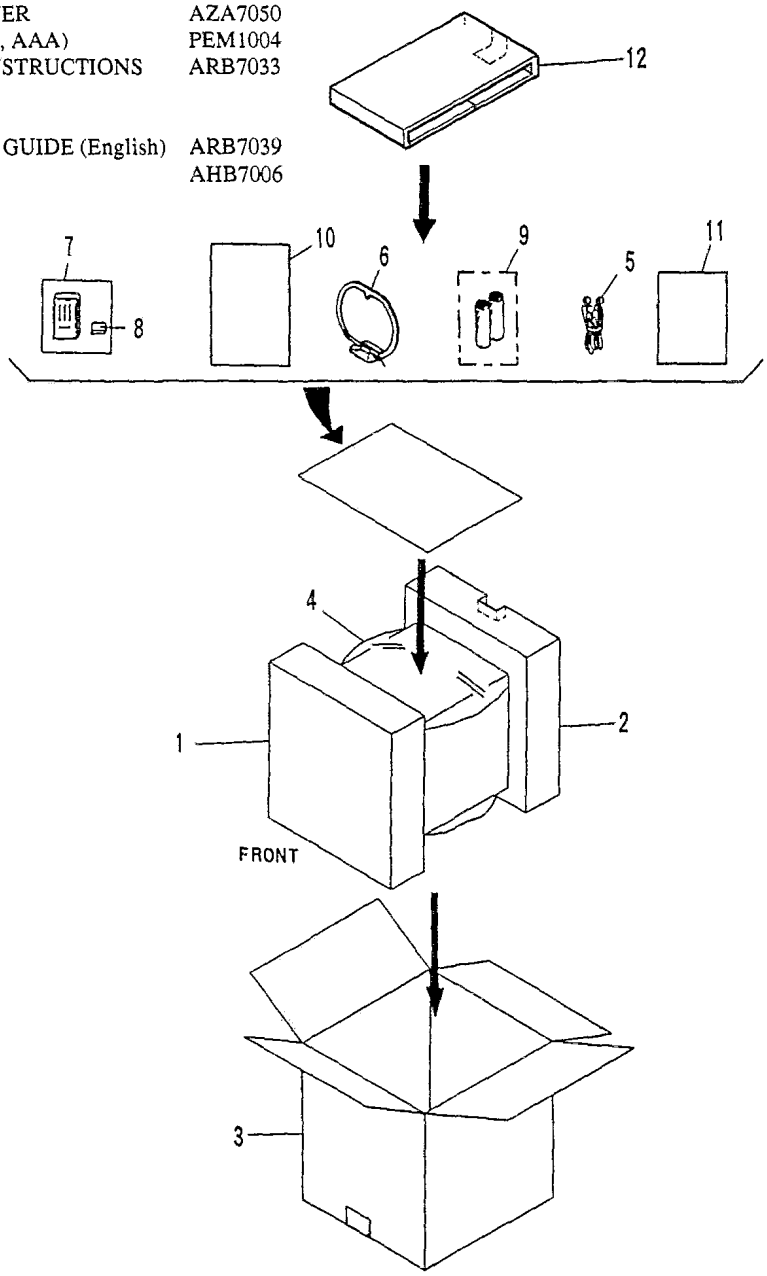

## 2.2 EXTERIOR (1/3)

| Mark | No. | Description | Parts No. |
|---|---|---|---|
| NSP | 1 | CD SINGLE MECHA ASSY | RXA1672 |
| | 2 | CD HOLDER L | ANG7023 |
| | 3 | CD HOLDER R | ANG7024 |
| | 4 | ..... | |
| | 5 | ..... | |
| | 6 | VOL. KNOB | AAB7051 |
| | 7 | ..... | |
| | 8 | DECK WINDOW L | AAK7136 |
| | 9 | DECK WINDOW R | AAK7137 |
| | 10 | TRAY CAP | AAK7139 |
| | 11 | MOLD | AAK7142 |
| | 12 | BONNET | AZN7210 |
| | 13 | SCREW | BBZ30P080FZK |
| | 14 | SCREW | BBZ30P180FMC |
| | 15 | FL WINDOW | AAK7138 |
| | 16 | CAUTION LABEL (G) | VRW-329 |
| NSP | 17 | CAUTION LABEL (F) | ARW1046 |
| NSP | 18 | CAUTION LABEL | ARW1050 |

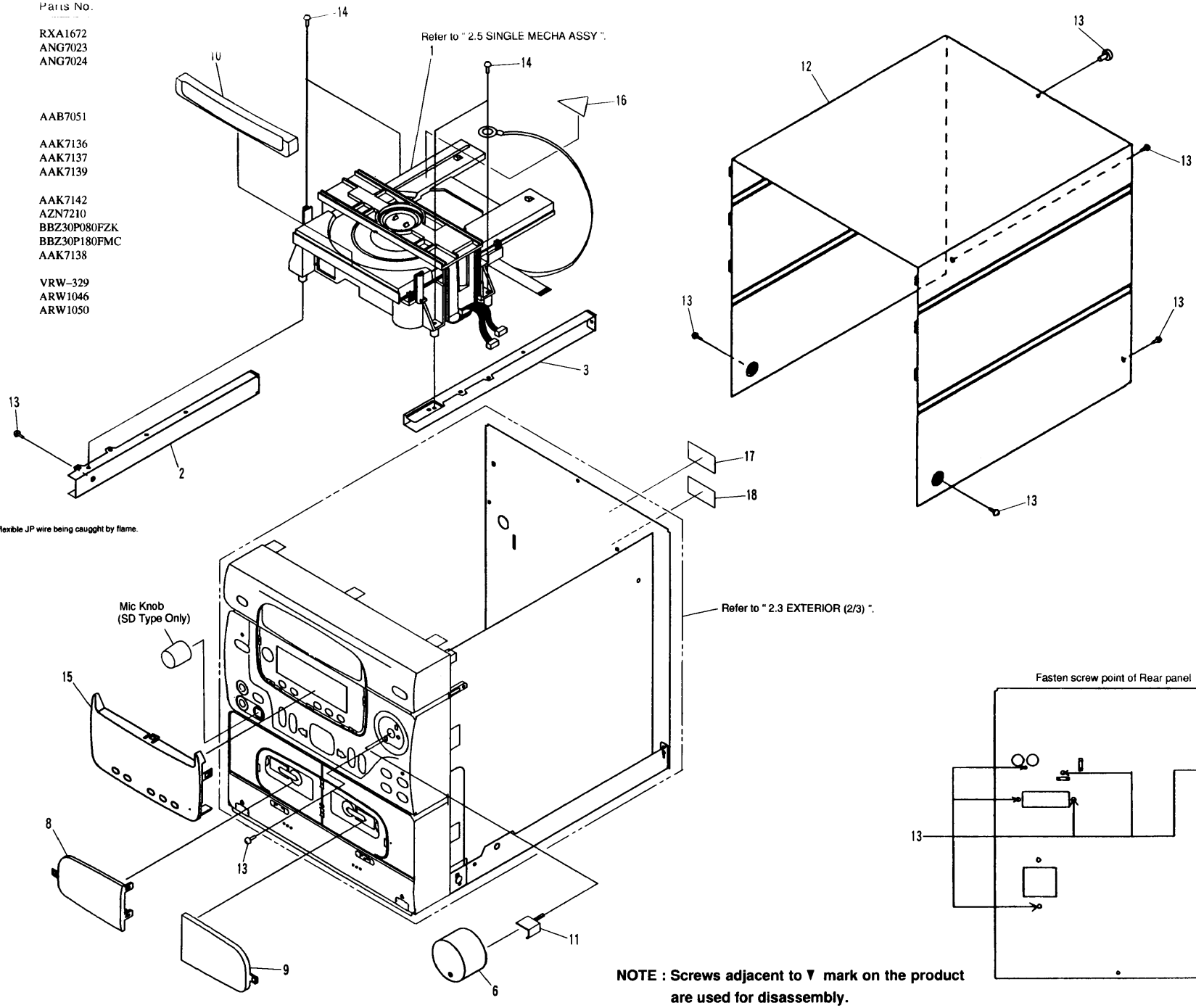


**NOTE : Screws adjacent to ▼ mark on the product are used for disassembly.**

## 2.3 EXTERIOR (2/3)

| Mark | No. | Description | Parts No. |
|---|---|---|---|
| | 1 | AF ASSY | AWZ7501 |
| NSP | 2 | SECONDARY ASSY | AWZ7508 |
| | 3 | PRIMARY ASSY | AWZ7509 |
| | 4 | FM/AM TUNER MODULE | AXQ3213 |
| ⚠ | 5 | FUSE (T500mA, FU1) | AEK1051 |
| ⚠ | 6 | POWER TRANSFORMER (T) | ATS7054 |
| ⚠ | 7 | AC POWER CORD | ADG1148 |
| | 8 | RUBBER SHEET | AEB1111 |
| | 9 | STRAIN RELIEF | AEC-882 |
| | 10 | MICA SHEET | AEE7003 |
| NSP | 11 | CHASSIS | ANA7020 |
| | 12 | REAR PANEL | ANC7215 |
| | 13 | POWER PACK HOLDER | ANG7025 |
| NSP | 14 | HEAT SINK | ANH7015 |
| | 15 | SCREW | BBZ30P080FZK |
| | 16 | SCREW | BBZ40P060FMC |
| ⚠ | 17 | FUSE (T5A) | AEK1046 |
| | 18 | BINDER | Z09-056 |
| NSP | 19 | CORD BINDER | DNF1128 |
| | 20 | SCREW | CBZ30P080FZK |

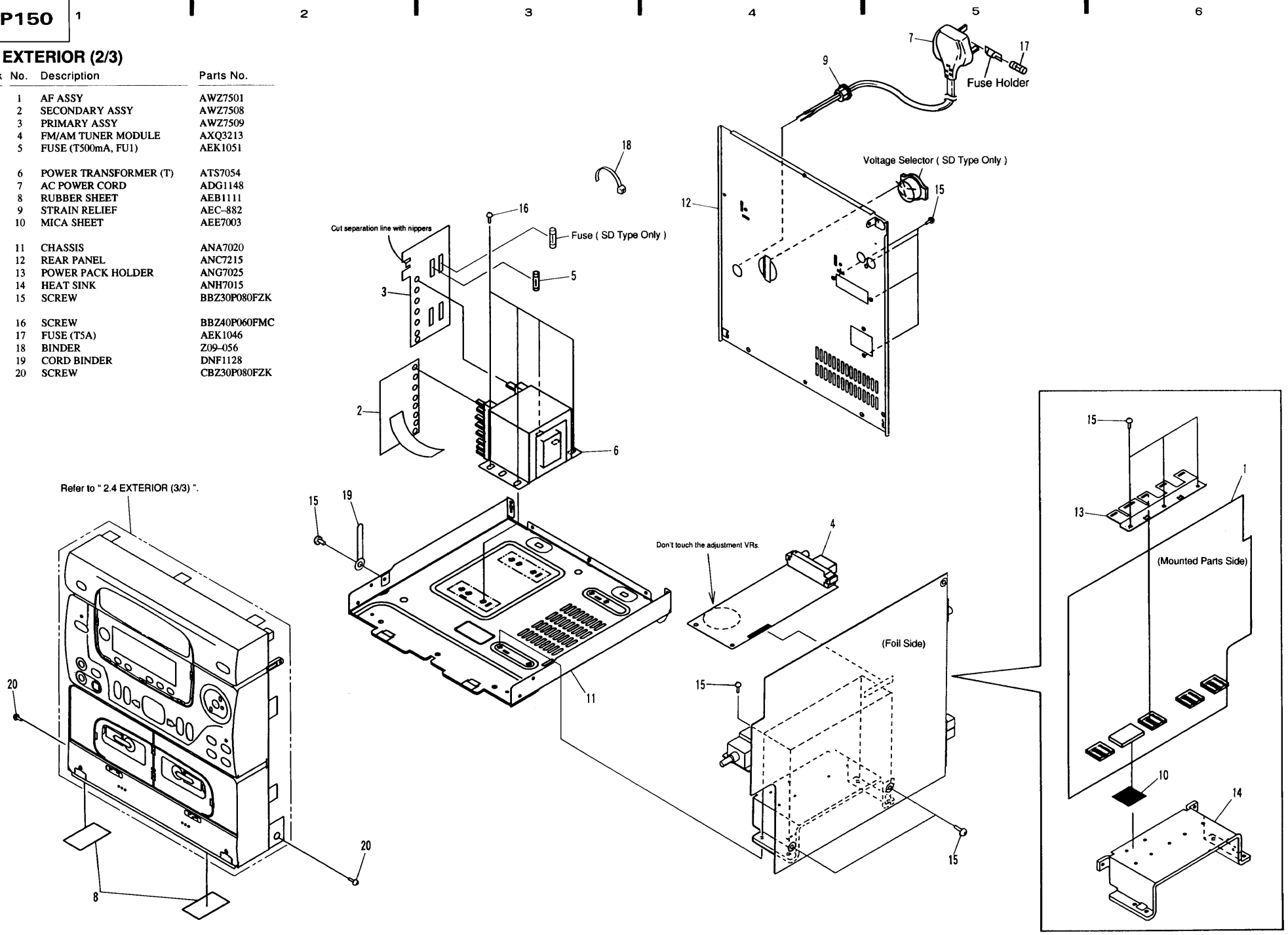

## 2.4 EXTERIOR (3/3)

| Mark | No. | Description | Parts No. |
|---|---|---|---|
| | 1 | DISPLAY ASSY | AWZ7504 |
| NSP | 2 | EJECT SW ASSY | AWZ7513 |
| NSP | 3 | HEADPHONE ASSY | AWZ7514 |
| | 4 | FLEXIBLE FLAT CABLE (21P) | ADD1121 |
| | 5 | FLEXIBLE FLAT CABLE (17P) | ADD7004 |
| | 6 | WIRE WITH TERMINAL | ADX1802 |
| | 7 | CONNECTOR ASSY (5P) | ADX7045 |
| | 8 | CONNECTOR ASSY (3P) | ADX7046 |
| | 9 | MECHANISM UNIT | RYM1235 |
| | 10 | DAMPER ASSY | VXA1053 |
| | 11 | EJECT SPRING L | ABH7028 |
| | 12 | EJECT SPRING R | ABH7029 |
| | 13 | EJECT ARM L | AMR7024 |
| | 14 | EJECT ARM R | AMR7025 |
| | 15 | SCREW | BSZ20P120FMC |
| | 16 | SPRING | RBK1004 |
| | 17 | COLLAR | RNK2135 |
| | 18 | FUNCTION BUTTON | AAD7170 |
| | 19 | DOLBY BUTTON | AAD7171 |
| | 20 | TIMER BUTTON | AAD7172 |
| | 21 | EJECT BUTTON L | AAD7173 |
| | 22 | EJECT BUTTON R | AAD7174 |
| | 23 | STOP BUTTON | AAD7177 |
| | 24 | STANDBY LENS | AAK7140 |
| | 25 | FRONT PANEL | AZN7207 |
| | 26 | CASSETTE DOOR L | AZN7208 |
| | 27 | CASSETTE DOOR R | AZN7209 |
| | 28 | SCREW | VPZ30P080FZK |
| | 29 | SCREW | ABA1005 |
| | 30 | DOOR SPRING L | ABH7060 |
| | 31 | DOOR SPRING R | ABH7061 |
| NSP | 32 | CORD BINDER | DNF1128 |

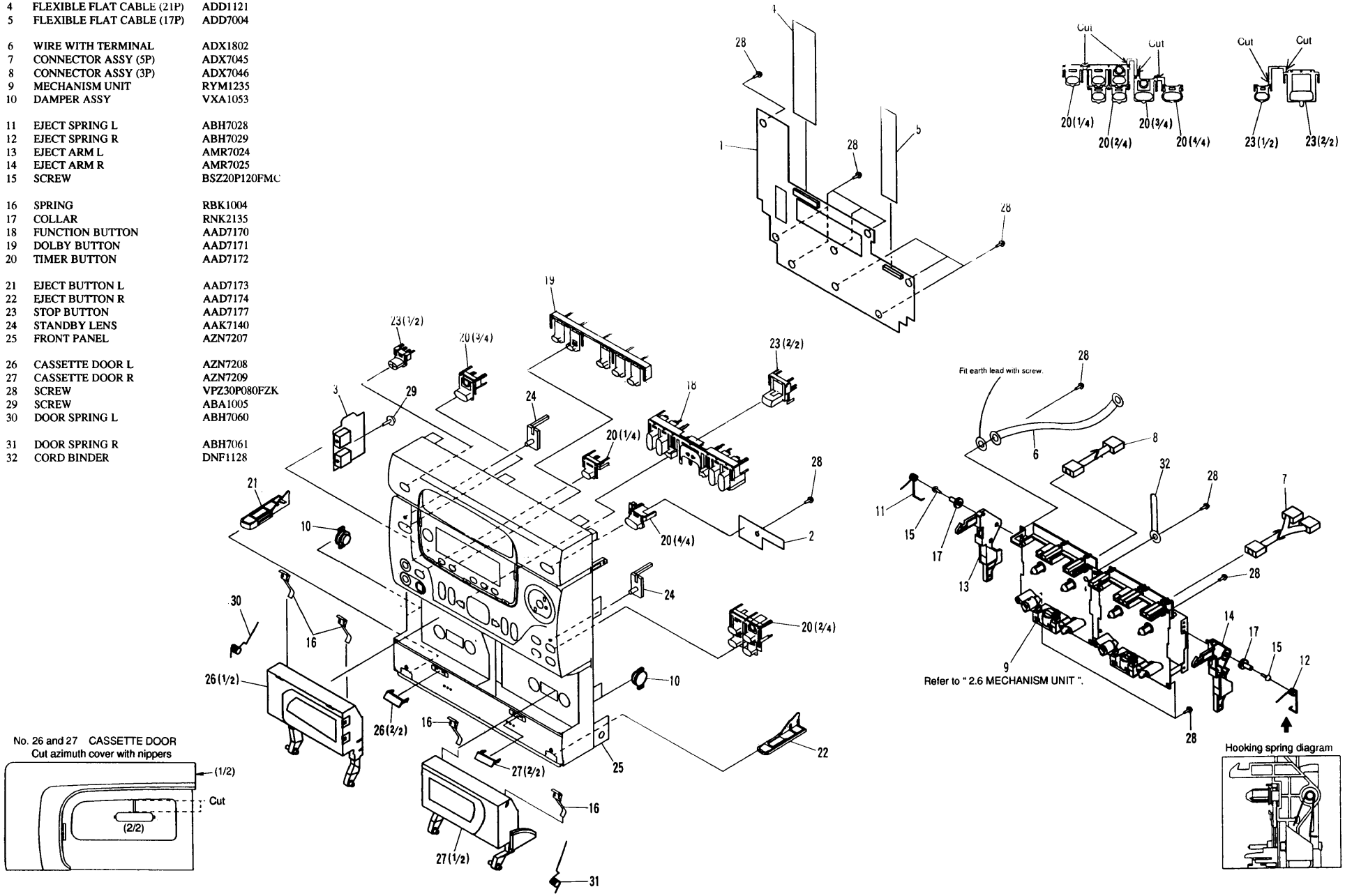

## 2.5 CD SINGLE MECHA ASSY

| Mark | No. | Description | Parts No. |
|---|---|---|---|
| | 1 | LEVER SWITCH (CLAMP, S601) | DSK1003 |
| | 2 | FLOAT SCREW | PBA1048 |
| | 3 | RUBBER BELT | PEB1193 |
| | 4 | MOTOR PULLEY | PNW1634 |
| | 5 | TRAY | PNW2455 |
| | 6 | FROAT BASE | PNW2032 |
| | 7 | DRIVE GEAR 2 | PNW2369 |
| | 8 | GEAR PULLEY | PNW2034 |
| | 9 | CLAMPER BASE | PNW2375 |
| | 10 | CLAMP CAM | PNW2364 |
| | 11 | DC MOTOR/0.75W (LOADING) | PXM1010 |
| | 12 | FLOAT RUBBER B (NBXK, MEXK/EA, MEXK/EB TYPES) | PEB1287 |
| | 12 | FLOAT RUBBER (SD TYPE) | PEB1014 |
| | 13 | FLOAT RUBBER G (NBXK, MEXK/EA, MEXK/EB TYPES) | PEB1288 |
| | 13 | FLOAT RUBBER (SD TYPE) | PEB1132 |
| | 14 | SCREW | BPZ26P080FMC |
| | 15 | SCREW | Z39–019 |
| | 16 | SCREW | PMZ26P040FMC |
| | 17 | PINION GEAR | PNW2055 |
| NSP | 18 | DC MOTOR (CARRIAGE) | PXM1027 |
| | 19 | DC MOTOR ASSY (SPINDLE) | PEA1235 |
| | 20 | CARRIAGE BASE | PNW2445 |
| | 21 | DISC TABLE | PNW1608 |
| | 22 | SCREW | JFZ20P030FNI |
| | 23 | SCREW | JFZ17P025FZK |
| | 24 | GEAR 3 | PNW2054 |
| | 25 | GEAR 2 | PNW2053 |
| | 26 | WASHER | WT12D032D025 |
| | 27 | PICKUP ASSY | PEA1291 |
| | 28 | GUIDE BAR | PLA1094 |
| | 29 | GEAR 1 | PNW2052 |
| | 30 | GEAR STOPPER | PNB1303 |
| | 31 | SCREW | BPZ20P060FMC |
| | 32 | PWB HOLDER | PNW2057 |
| | 33 | SCREW | BPZ26P100FMC |
| | 34 | EARTH LEAD UNIT | PDF1104 |
| | 35 | SCREW | BBZ26P060FMC |
| NSP | 36 | MECHANISM BOARD ASSY | PWX1192 |
| | 37 | CLAMP MAGNET | PMF1014 |
| | 38 | YOKE | PNB1216 |
| NSP | 39 | H RUBBER | PEB1249 |
| | 40 | CLAMPER S | PNW1609 |
| | 41 | LOADING BASE | PNW2376 |
| | 42 | DC MOTOR ASSY (CARRIAGE) | PEA1246 |
| NSP | 43 | SERVO MECHANISM ASSY | AXA7017 |
| | 44 | ..... | |
| | 45 | CONNECTOR ASSY (4P) | RDE1043 |
| | 46 | CONNECTOR ASSY (5P) | PDE1239 |

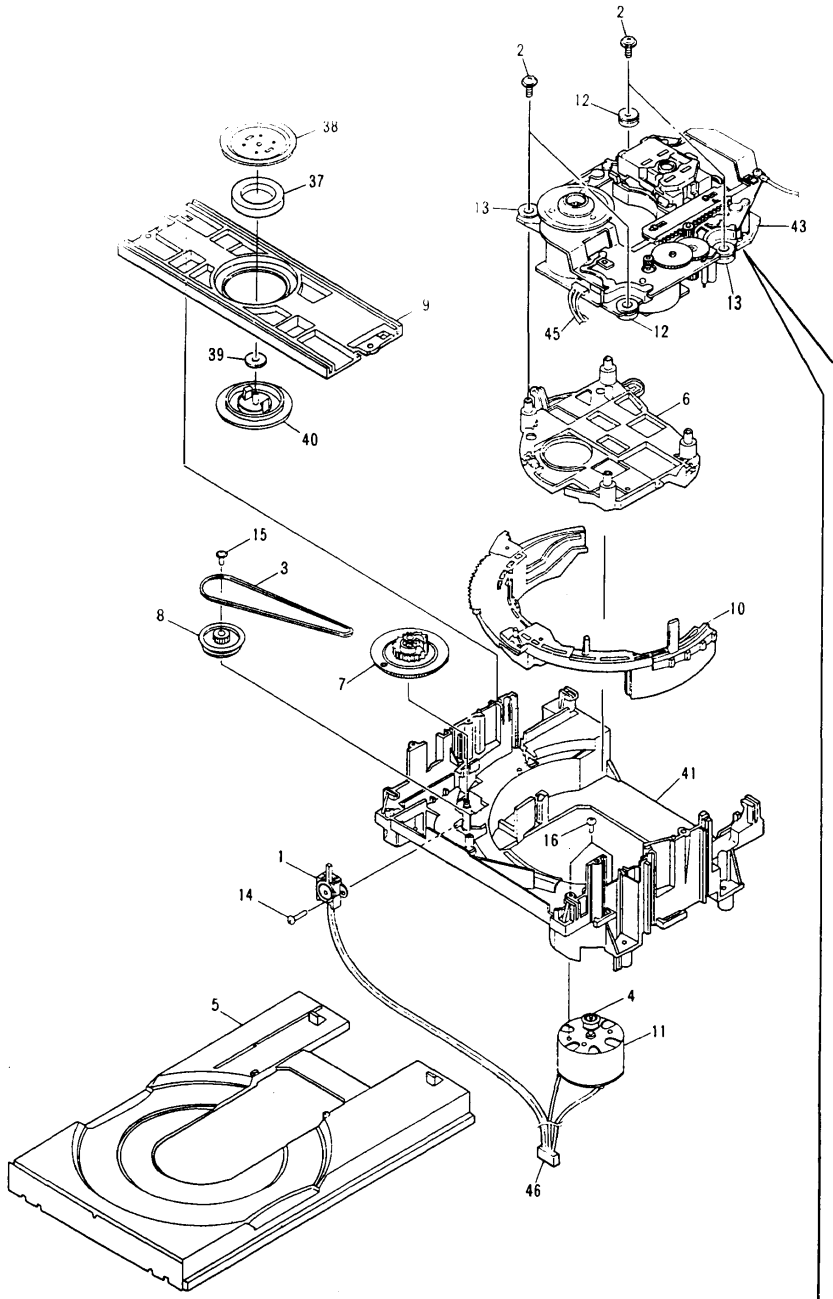

● How to install the disc table

1 Use nipper or other tool to cut the three sections marked Ⓐ figure 1. Then remove the spacer.

2 While supporting the spindle motor shaft with the stopper, put spacer on top of the motor base (angled so it doesn't touch section Ⓑ), and stick the disc table on top (takes about 9kg pressure). Take off the spacer.

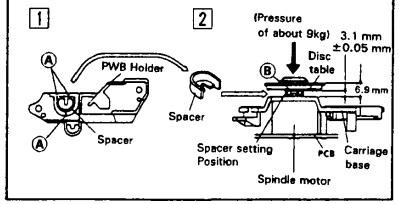


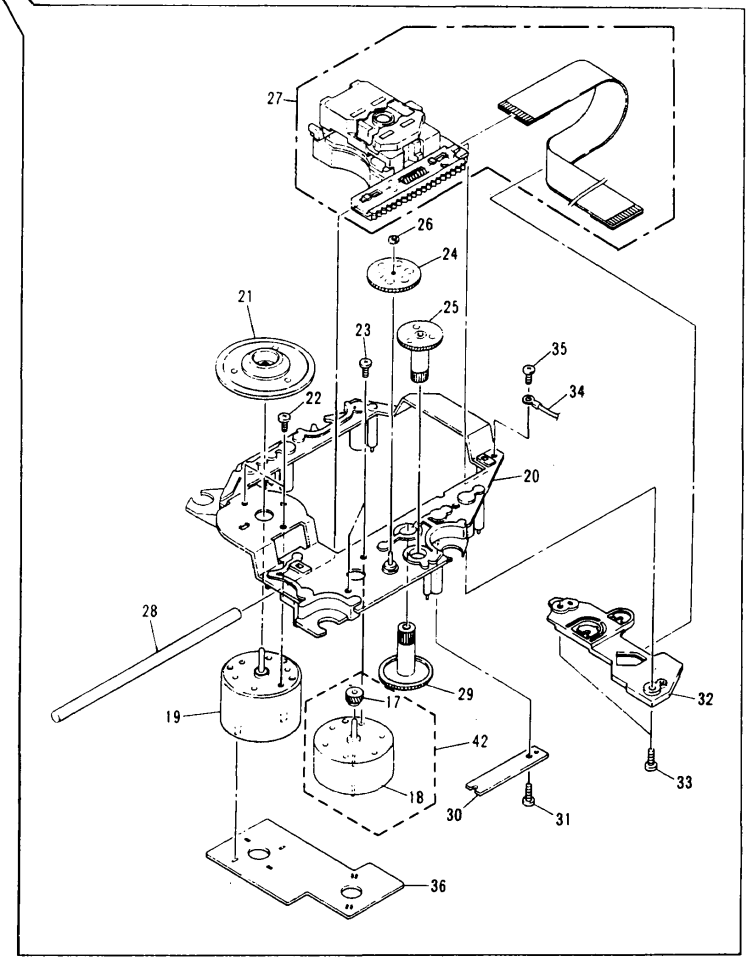

## 2.6 MECHANISM UNIT

### ● Mechanism unit Ⅰ and Ⅱ (1/2)

| Mark | No. | Description | Parts No. |
|---|---|---|---|
| | 1 | ASSY MOTOR | RXM1080 |
| NSP | 2 | JUMPER WIRE | RDD1012 |
| | 3 | BRACKET MOTOR | RNE1830 |
| | 4 | SPACER | RNK1822 |
| | 5 | SCREW | RBA1100 |
| | 6 | SCREW | PCZ20P040FMC |

### ● Mechanism unit Ⅰ and Ⅱ (2/2)

| Mark | No. | Description | Parts No. |
|---|---|---|---|
| | 1 | ASSY HOLDER HEAD (*1) | RXA1400 |
| | 1 | ASSY HOLDER HEAD (*2) | RXA1664 |
| | 2 | FRAME HEAD | RNK1715 |
| | 3 | LEVER HEAD | RNK1716 |
| | 4 | SPRING AZIMUTH | RBK1006 |
| | 5 | ASSY ARM ASSIST | RXA1401 |
| | 6 | GEAR ARM HEAD | RNK1717 |
| | 7 | SPRING CASSETTE | RBK1039 |
| | 8 | EJECT LOCK | RNK1718 |
| | 9 | CAP REEL | RNK1719 |
| | 10 | ASSY PINCH ARM L | RXA1403 |
| | 11 | CHASSIS HEAD | RNE1437 |
| | 12 | ASSY PINCH ARM R | RXA1404 |
| | 13 | ARM PLAY L | RNK1866 |
| | 14 | GEAR PLAY | RNK1867 |
| | 15 | ARM PLAY R | RNK1868 |
| | 16 | CHASSIS OS | RXA1411 |
| | 17 | ASSY SUB REEL L | RXA1407 |
| | 18 | SOLENOID | RXP1020 |
| | 19 | WIRE | RDC1006 |
| | 20 | ARM RVS | RNK1721 |
| | 21 | GEAR FF | RNK1723 |
| | 22 | ASSY ARM FR | RXA1412 |
| | 23 | ASSY PULLEY FR | RXA1413 |
| | 24 | BELT FR | REB1158 |
| | 25 | METAL | RNG1048 |
| | 26 | ASSY FLYWHEEL L (*1) | RXA1666 |
| | 26 | ASSY FLYWHEEL L2 (*2) | RXA1668 |
| | 27 | METAL | RNG1005 |
| | 28 | ARM BRAKE | RNK1724 |
| | 29 | ASSY SUB REEL R | RXA1408 |
| | 30 | ARM TRIGER | RNK1722 |
| | 31 | GEAR CAM | RNK1725 |
| | 32 | METAL | RNG1049 |
| | 33 | ASSY FLYWHEEL R (*1) | RXA1667 |
| | 33 | ASSY FLYWHEEL R2 (*2) | RXA1669 |
| | 34 | METAL | RNG1004 |
| | 35 | ..... | |
| | 36 | ..... | |
| | 37 | P. C. BOARD | RNP1610 |
| | 38 | SWITCH MODE | RSN1020 |
| | 39 | SWITCH (LEAF) | RSN1019 |
| | 40 | HALL IC | DN6851A |
| | 41 | ASSY BRACKET (*1) | RXA1665 |
| | 41 | BRACKET FW (*2) | RNE1438 |
| | 42 | PULLEY (*1 only) | RNK2132 |
| | 43 | ..... | |
| | 44 | ..... | |
| | 45 | BELT MAIN (*1) | REB1273 |
| | 45 | BELT MAIN (*2) | REB1272 |
| | 46 | P. C. BOARD | RNP1348 |
| | 47 | HOUSING (*1) | RKP1396 |
| | 47 | HOUSING (*2) | RKP1397 |
| | 48 | CONNECTOR (*1) | RKP1713 |
| | 48 | CONNECTOR (*2) | RKP1714 |
| | 49 | ..... | |
| | 50 | ..... | |
| | 51 | SPRING | RBH1282 |
| | 52 | SPRING | RBH1283 |
| | 53 | SPRING | RBH1284 |
| | 54 | SPRING | RBH1286 |
| | 55 | SPRING | RBH1288 |
| | 56 | SPRING | RBH1291 |
| | 57 | SPRING | RBH1285 |
| | 58 | SPRING | RBH1287 |
| | 59 | SPRING | RBH1289 |
| | 60 | SPRING | RBH1290 |
| | 61 | SPRING | RBH1292 |
| | 62 | FWP SP (SPRING) | RBH1061 |
| | 63 | SPRING | RBH1325 |
| | 64 | SCREW (FOR AZIMUTH) | RBA1023 |
| | 65 | SCREW | RBA1027 |
| | 66 | SCREW | RBA1030 |
| | 67 | SCREW | PCZ20P040FMC |
| | 68 | SCREW | RBA1093 |
| | 69 | SCREW | RBA1094 |
| | 70 | WASHER | RBF1046 |
| | 71 | WASHER | WA26D047D013 |
| | 72 | WASHER (*1 only) | WT13D030D025 |

*Note)*
** 1: Mechanism Unit Ⅰ*
** 2: Mechanism Unit Ⅱ*

● Mechanism unit Ⅰ and Ⅱ (1/2)

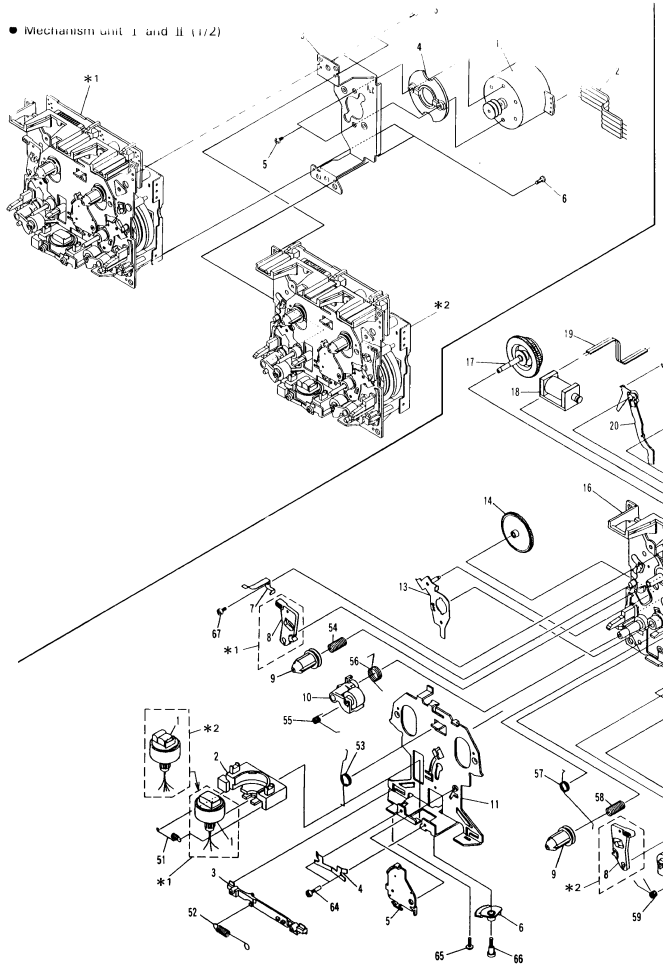

● Mechanism unit Ⅰ and Ⅱ (2/2)

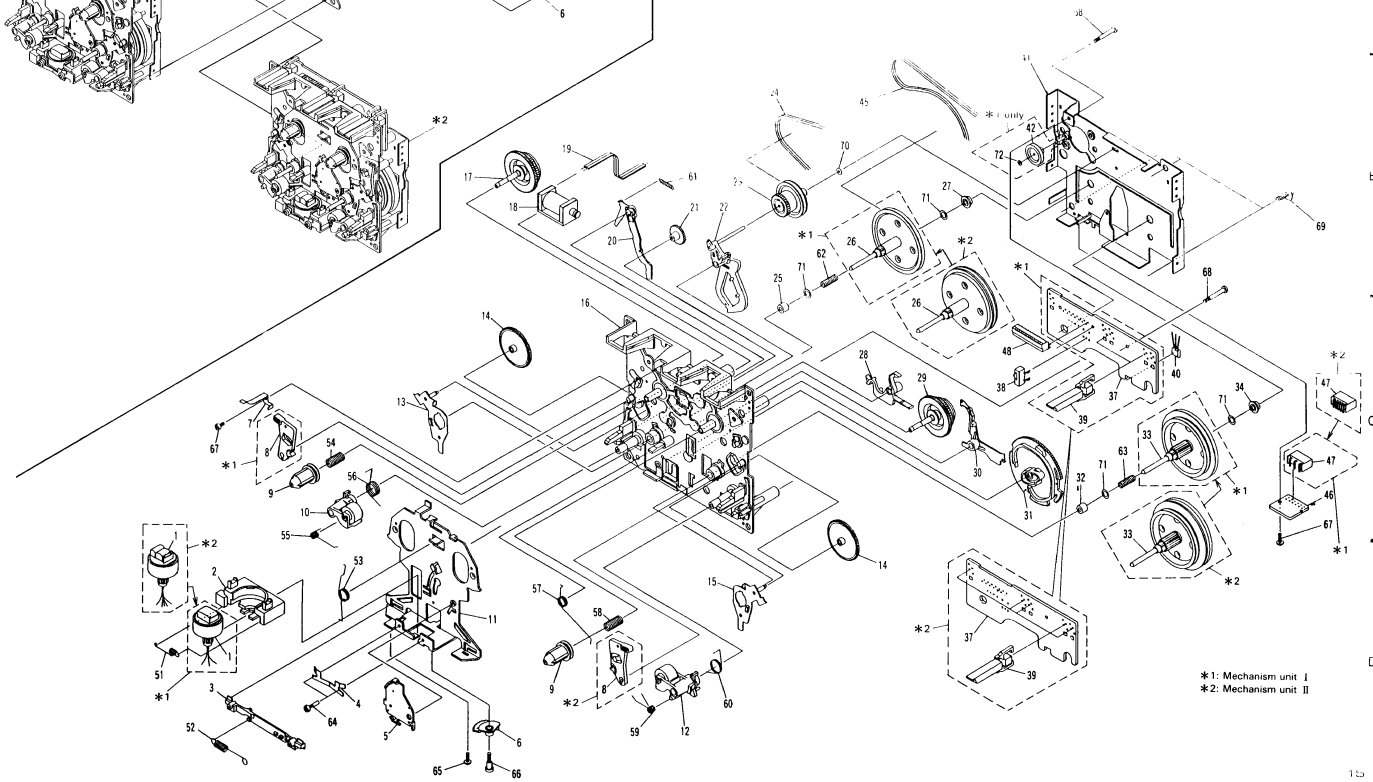

# 3. SCHEMATIC AND PCB CONNECTION DIAGRAMS

## 3.1 OVERALL SCHEMATIC DIAGRAM

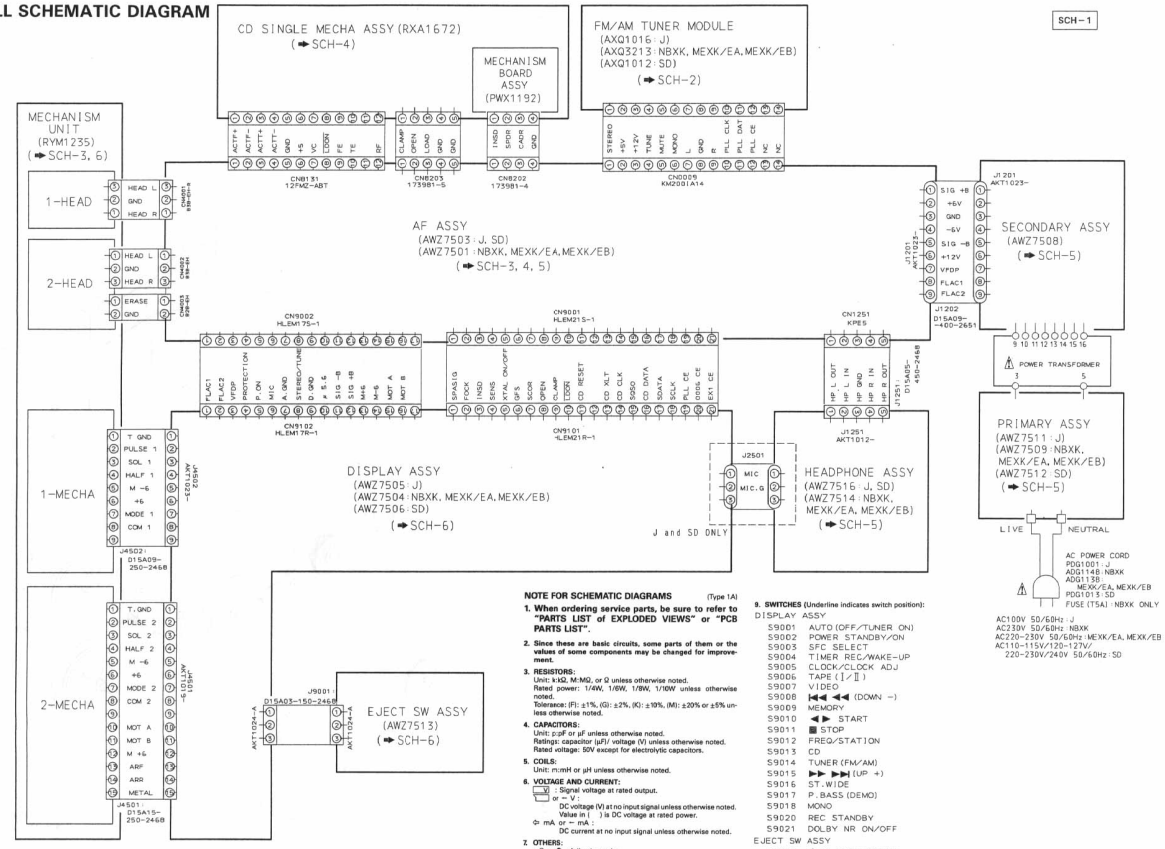


**NOTE FOR SCHEMATIC DIAGRAMS** (Type 1A)

1. **When ordering service parts, be sure to refer to "PARTS LIST of EXPLODED VIEWS" or "PCB PARTS LIST".**
2. **Since these are basic circuits, some parts of them or the values of some components may be changed for improvement.**
3. **RESISTORS:**
   Unit: kΩ, M:MΩ, or Ω unless otherwise noted.
   Rated power: 1/4W, 1/6W, 1/8W, 1/10W unless otherwise noted.
   Tolerance: (F): ±1%, (G): ±2%, (K): ±10%, (M): ±20% or ±5% unless otherwise noted.
4. **CAPACITORS:**
   Unit: p:pF or μF unless otherwise noted.
   Ratings: capacitor (μF)/ voltage (V) unless otherwise noted.
   Rated voltage: 50V except for electrolytic capacitors.
5. **COILS:**
   Unit: m:mH or μH unless otherwise noted.
6. **VOLTAGE AND CURRENT:**
   ⏚ : Signal voltage at rated output.
   ⏚ or ⏚ V :
   DC voltage (V) at no input signal unless otherwise noted.
   Value in ( ) is DC voltage at rated power.
   ⏚ mA or ⏚ mA ( ) :
   DC current at no input signal unless otherwise noted.
7. **OTHERS:**
   - ⊕ or ⊕ : Adjusting point.
   - ⊸ : Measurement point.
   - The ⚠ mark found on some component parts indicates the importance of the safety factor of the parts. Therefore, when replacing, be sure to use parts of identical designation.
8. **SCH-□ ON THE SCHEMATIC DIAGRAM:**
   - SCH-□ indicates the drawing number of the schematic diagram. (SCH stands for schematic diagram.)
9. **SWITCHES** (Underline indicates switch position):

DISPLAY ASSY
- S9001 AUTO (OFF/TUNER ON)
- S9002 POWER STANDBY/ON
- S9003 SFC SELECT
- S9004 TIMER REC/WAKE-UP
- S9005 CLOCK/CLOCK ADJ
- S9006 TAPE (I/⏥)
- S9007 VIDEO
- S9008 ⏮ ◀◀ (DOWN −)
- S9009 MEMORY
- S9010 ◀ ▶ START
- S9011 ■ STOP
- S9012 FREQ/STATION
- S9013 CD
- S9014 TUNER (FM/AM)
- S9015 ▶▶ ▶▶I (UP +)
- S9016 ST.WIDE
- S9017 P.BASS (DEMO)
- S9018 MONO
- S9020 REC STANDBY
- S9021 DOLBY NR ON/OFF

EJECT SW ASSY
- S9019 ⏏ CD OPEN/CLOSE

MECHANISM BOARD ASSY
- S610 INSIDE SW



## 3.2 FM/AM TUNER MODULE

- This diagram is viewed from the mounted parts side.

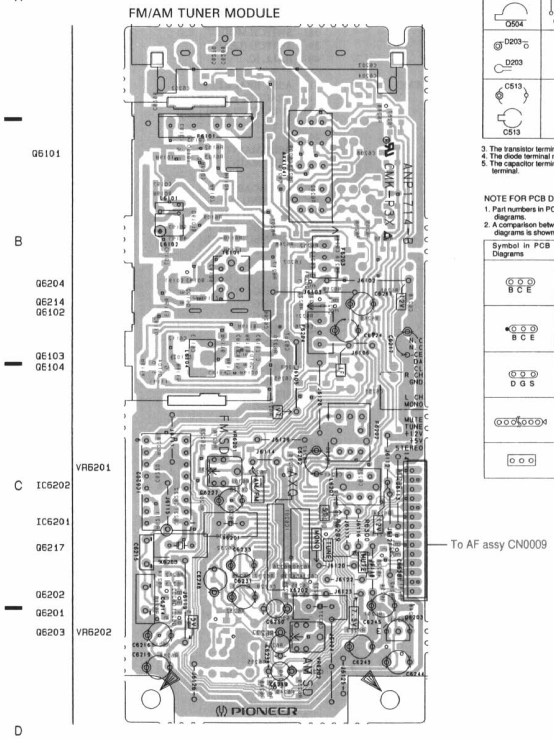


The parts mounted on this PCB include all necessary parts for several destinations.
For further information for respective destinations, be sure to check with the schematic diagram.

PCB-1

NOTE FOR PCB DIAGRAMS:
1. Part numbers in PCB diagrams match those in the schematic diagrams.
2. A comparison between the main parts of PCB and schematic diagrams is shown below.

| Symbol in PCB Diagrams | Symbol in Schematic Diagrams | Part Name |
|---|---|---|
| Q504 (E C B) | Q504 Q504 | Transistor |
| D203 | D203 | Diode |
| C513 | C513 | Capacitor (Polarized) |

3. The transistor terminal marked with E or E shows the emitter.
4. The diode terminal marked with ⊕ or ⊕ shows cathode side.
5. The capacitor terminal marked with ⊕ or E shows negative terminal.

NOTE FOR PCB DIAGRAMS:
1. Part numbers in PCB diagrams match those in the schematic diagrams.
2. A comparison between the main parts of PCB and schematic diagrams is shown below.

| Symbol in PCB Diagrams | Symbol in Schematic Diagrams | Part Name |
|---|---|---|
| B C E | B C E B C E | Transistor |
| B C E | B C E B C E | Transistor with resistor |
| D G S | D G S D G S | Field effect transistor |
| | | Resistor array |
| | | 3-terminal regulator |

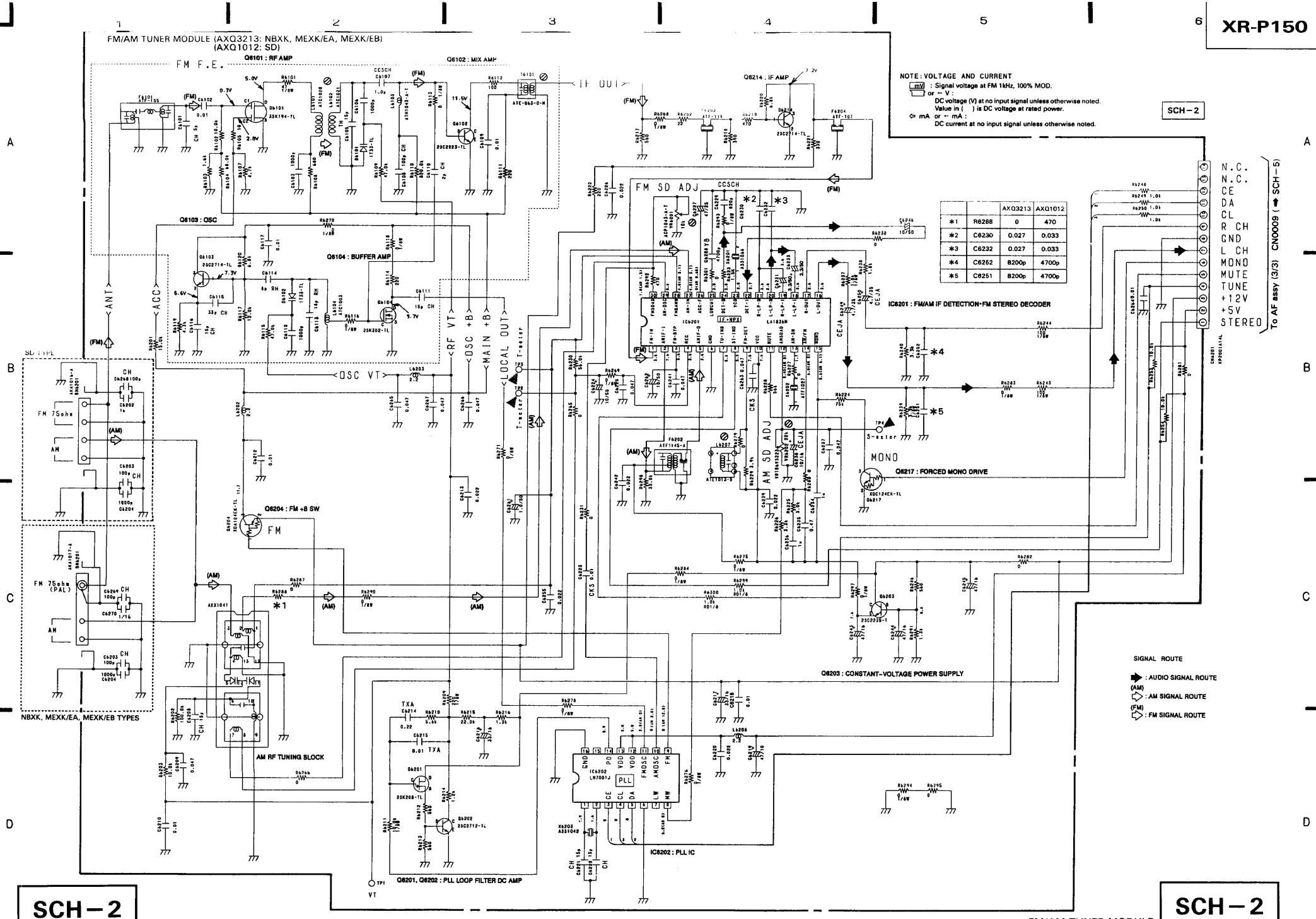


| | | AXQ3213 | AXQ1012 |
|---|---|---|---|
| *1 | R6288 | 0 | 470 |
| *2 | C6230 | 0.027 | 0.033 |
| *3 | C6232 | 0.027 | 0.033 |
| *4 | C6252 | 8200p | 4700p |
| *5 | C6251 | 8200p | 4700p |

## 3.3 AF ASSY、SECONDARY ASSY、PRIMARY ASSY、HEADPHONE ASSY、CD SINGLE MECHA ASSY、MECHANISM UNIT (1/2)

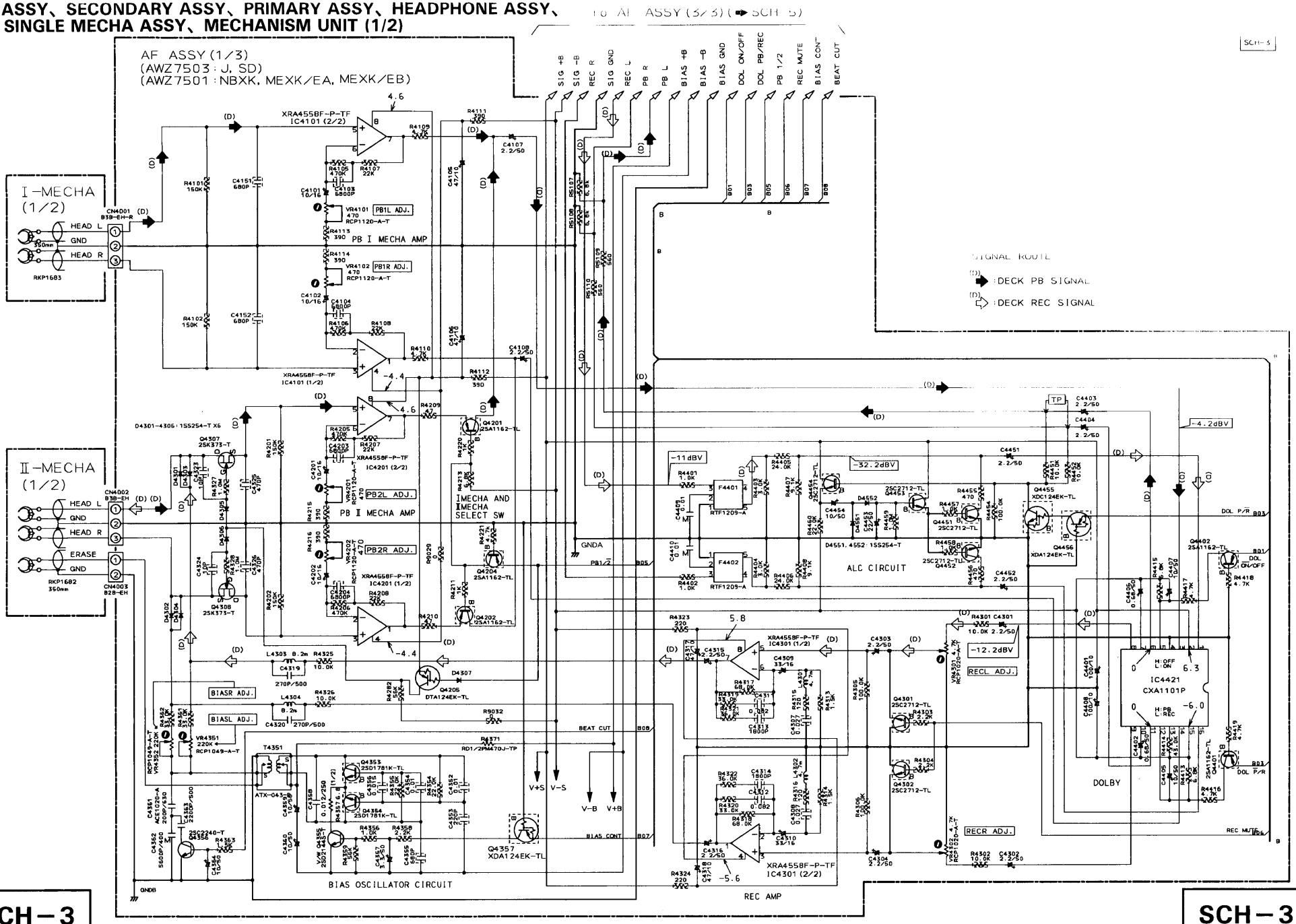

## Waveforms

*Note: The encircled numbers denote measuring point in the schematic disgram.*

*2 FOCUS-IN: Press the key without loading a disc.

| | | |
|---|---|---|
| ② TP1-Pin1: PLAY MODE (RF)<br>500mV/div 500nsec/div<br> 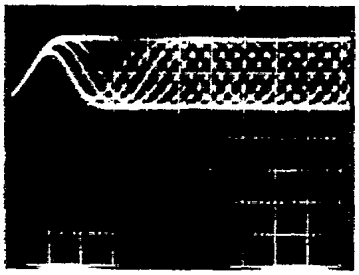 –VC | ⑤ IC8202-Pin3: FOCUS-IN (*2) MODE (FODR)<br>1V/div 200msec/div<br> 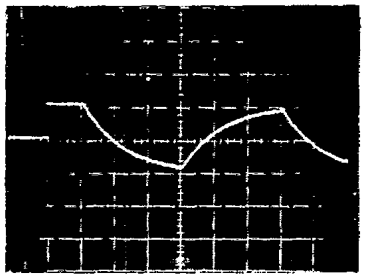 –GND | ⑦ IC8201-Pin3: PLAY MODE (SPDR)<br>1V/div 50msec/div<br> 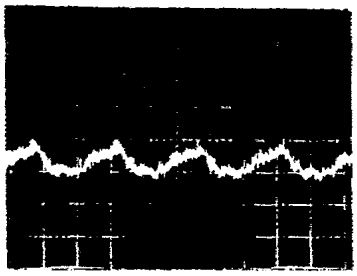 –GND |
| ② TP1-Pin1: TRACK SEARCH MODE (RF)<br>500mV/div 200μsec/div<br> 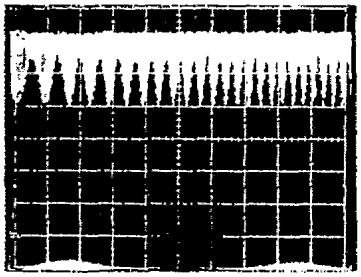 –VC | ⑤ IC8202-Pin3: PLAY MODE (FODR)<br>1V/div 1msec/div<br> –GND | ⑦ IC8201-Pin3: TRACK SEARCH MODE (SPDR)<br>2V/div 50msec/div<br> 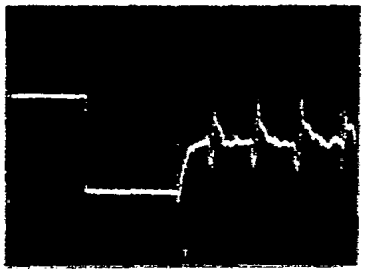 –GND |
| ③ TP1-Pin6: PLAY MODE (FOER)<br>100mV/div 10msec/div<br> 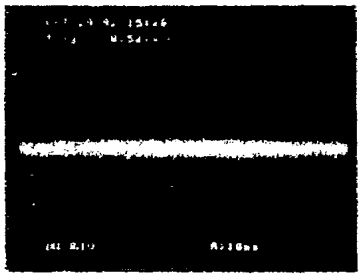 –VC | | ⑧ IC8202-Pin9: PLAY MODE (CADR)<br>0.2V/div 2sec/div<br> 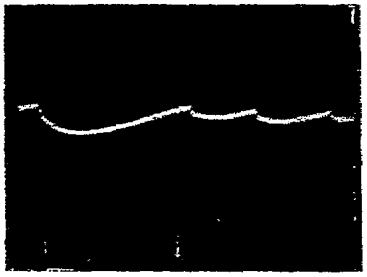 –GND |
| ④ TP1-Pin2: PLAY MODE (TRER)<br>1V/div 1msec/div<br> 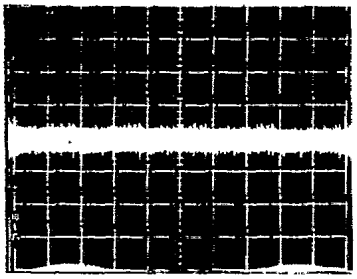 –VC | ⑥ IC8202-Pin4: PLAY MODE (TRDR)<br>500mV/div 1msec/div<br> 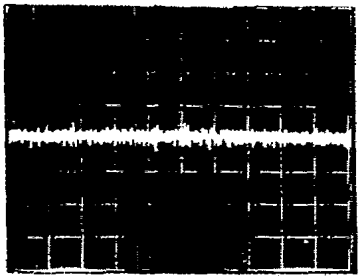 –GND | ⑧ IC8202-Pin9: TRACK SEARCH MODE (CADR)<br>2V/div 200msec/div<br> 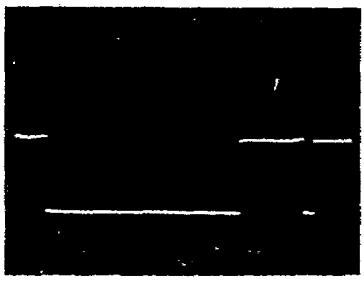 –GND |

⑨ IC8151-Pin32: PLAY MODE (EFM)
2V/div 500nsec/div

⑲ IC8301-Pin44: PLAY MODE (1kHz) (PCMD)
2V/div 500nsec/div

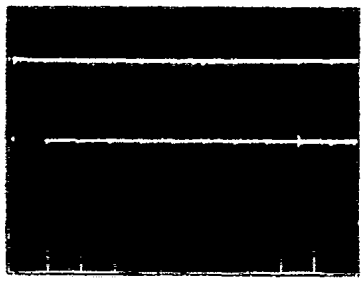


㉝ IC8301-Pin25: PLAY MODE (MDP)
2V/div 2μsec/div

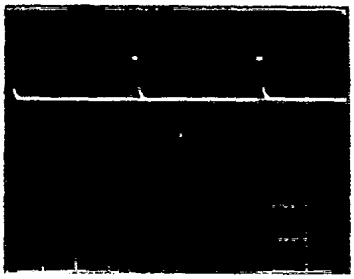


⑯ IC8301-Pin46: PLAY MODE (1kHz) (BCK)
2V/div 500nsec/div

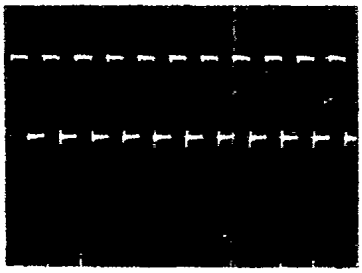


㉓ : TRACK SEARCH MODE
Upper: TP1-Pin1 (RF) 1V/div
Lower: IC8151-Pin26 (C. OUT)
2V/div 50μsec/div

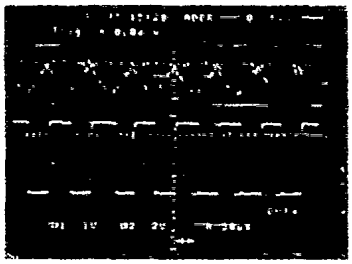


⑱ IC8301-Pin42: PLAY MODE (1kHz) (LRCK)
2V/div 10μsec/div

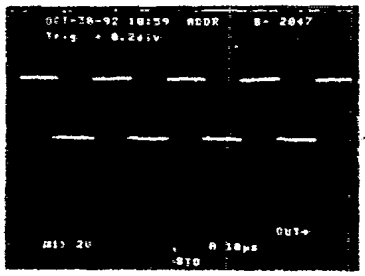


㉔ : PLAY MODE
Upper: TP1-Pin1 (RF) 1V/div
Lower: IC8151-Pin30 (DFCT)
5V/div 200μsec/div

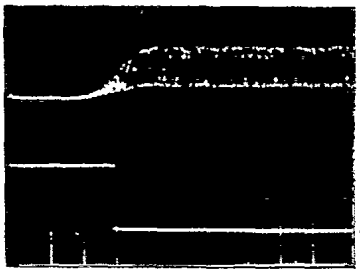


## IC8151 (CXA1372Q)

| Pin No. | Voltage [V] | Pin No. | Voltage [V] | Pin No. | Voltage [V] | Pin No. | Voltage [V] |
|---|---|---|---|---|---|---|---|
| 1 | 2.5 | 13 | 2.5 | 25 | 5.0 | 37 | 2.0 |
| 2 | 2.5 | 14 | 2.5 to 2.6 | 26 | 0.1 | 38 | 2.7 to 2.8 |
| 3 | 2.5 | 15 | 2.5 | 27 | 4.9 | 39 | 2.5 |
| 4 | 2.5 | 16 | 0.8 | 28 | 0 | 40 | 3.2 |
| 5 | 2.4 | 17 | 1.3 | 29 | 0 | 41 | 0 |
| 6 | 2.5 | 18 | 2.5 | 30 | 0 | 42 | 2.5 |
| 7 | 2.6 | 19 | 0 | 31 | 0 | 43 | 2.5 |
| 8 | 2.5 | 20 | 5.0 | 32 | 2.7 | 44 | 2.5 |
| 9 | 2.5 | 21 | 5.0 | 33 | 5.0 | 45 | 2.5 |
| 10 | 5.0 | 22 | 4.9 | 34 | 1.3 | 46 | 2.5 |
| 11 | 2.5 | 23 | 5.0 | 35 | 1.0 | 47 | 2.5 |
| 12 | 2.5 | 24 | 4.9 to 5.0 | 36 | 5.0 | 48 | 2.4 |

## IC8301 (CXD2508AQ)

| Pin No. | Voltage [V] | Pin No. | Voltage [V] | Pin No. | Voltage [V] | Pin No. | Voltage [V] |
|---|---|---|---|---|---|---|---|
| 1 | 0.1 | 21 | 5.0 | 41 | 2.4 | 61 | 2.0 |
| 2 | 0.1 | 22 | 0 | 42 | 2.4 | 62 | 0 |
| 3 | 5.0 | 23 | 5.0 | 43 | 2.4 | 63 | 0 |
| 4 | 0.1 | 24 | 5.0 | 44 | 2.4 | 64 | 2.5 |
| 5 | 4.9 | 25 | 2.6 to 2.7 | 45 | 2.4 | 65 | 0 |
| 6 | 0 | 26 | 0.1 | 46 | 1.8 | 66 | 0 |
| 7 | 2.2 to 2.5 | 27 | 5.0 | 47 | 1.8 | 67 | 0 |
| 8 | 5.0 | 28 | 0 | 48 | 0 | 68 | 5.0 |
| 9 | 4.9 | 29 | 2.7 | 49 | 4.9 | 69 | 2.5 |
| 10 | 5.0 | 30 | 2.6 | 50 | 1.2 | 70 | 2.5 |
| 11 | 4.9 | 31 | 2.6 | 51 | 4.9 | 71 | 5.0 |
| 12 | 0 | 32 | 5.0 | 52 | 2.5 | 72 | 5.0 |
| 13 | 4.9 | 33 | 0 | 53 | 0 | 73 | 2.4 |
| 14 | 0.1 | 34 | 2.7 | 54 | 0 | 74 | 2.4 |
| 15 | 4.9 to 5.0 | 35 | 5.0 | 55 | 4.9 | 75 | 0 |
| 16 | 5.0 | 36 | 2.7 | 56 | 4.5 | 76 | 0 |
| 17 | 4.9 | 37 | 0 | 57 | 0 | 77 | 2.5 |
| 18 | 0 | 38 | 0 | 58 | 0 to 0.3 | 78 | 2.5 |
| 19 | 0 | 39 | 2.5 | 59 | 2.8 | 79 | 0 |
| 20 | 0 | 40 | 0 | 60 | 1.4 | 80 | 0 |

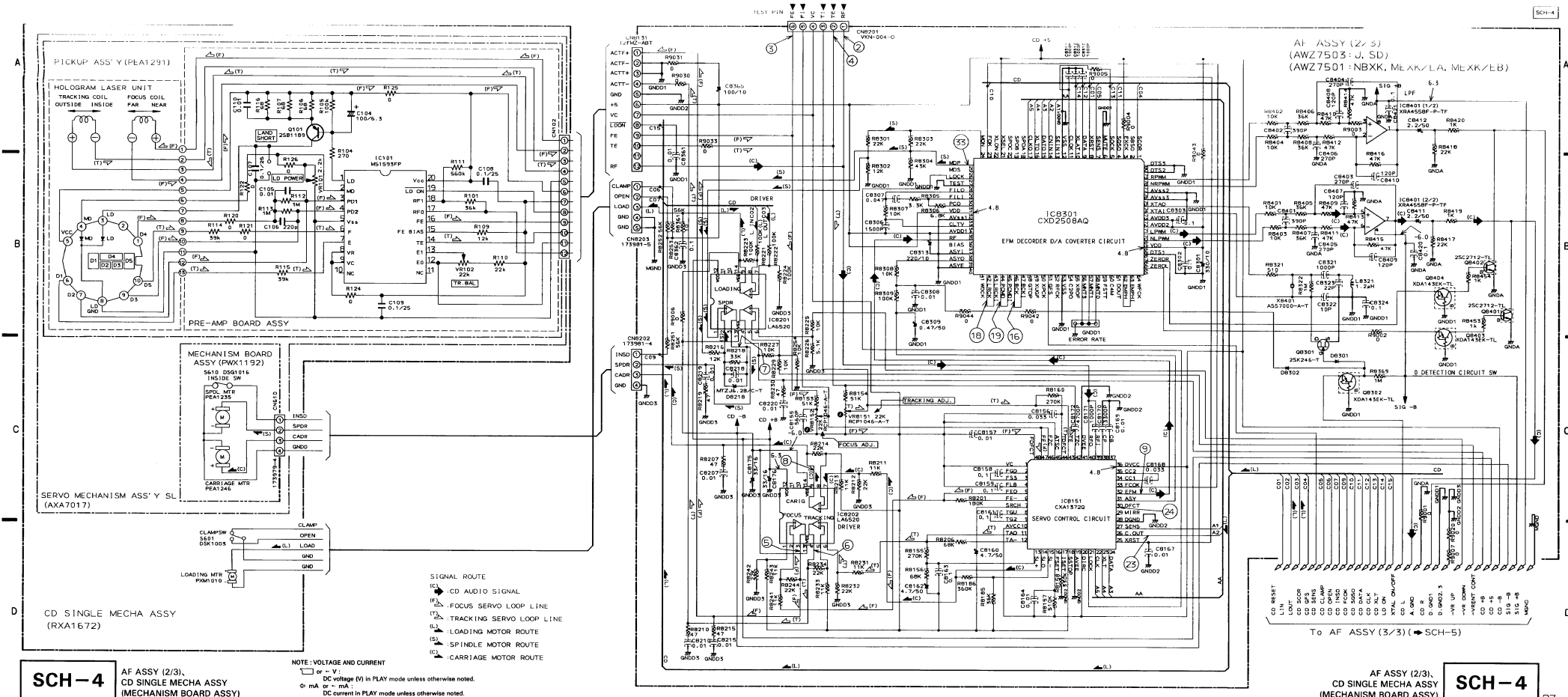


**SCH-4** AF ASSY (2/3), CD SINGLE MECHA ASSY (MECHANISM BOARD ASSY)

AF ASSY (2/3), CD SINGLE MECHA ASSY (MECHANISM BOARD ASSY) **SCH-4**

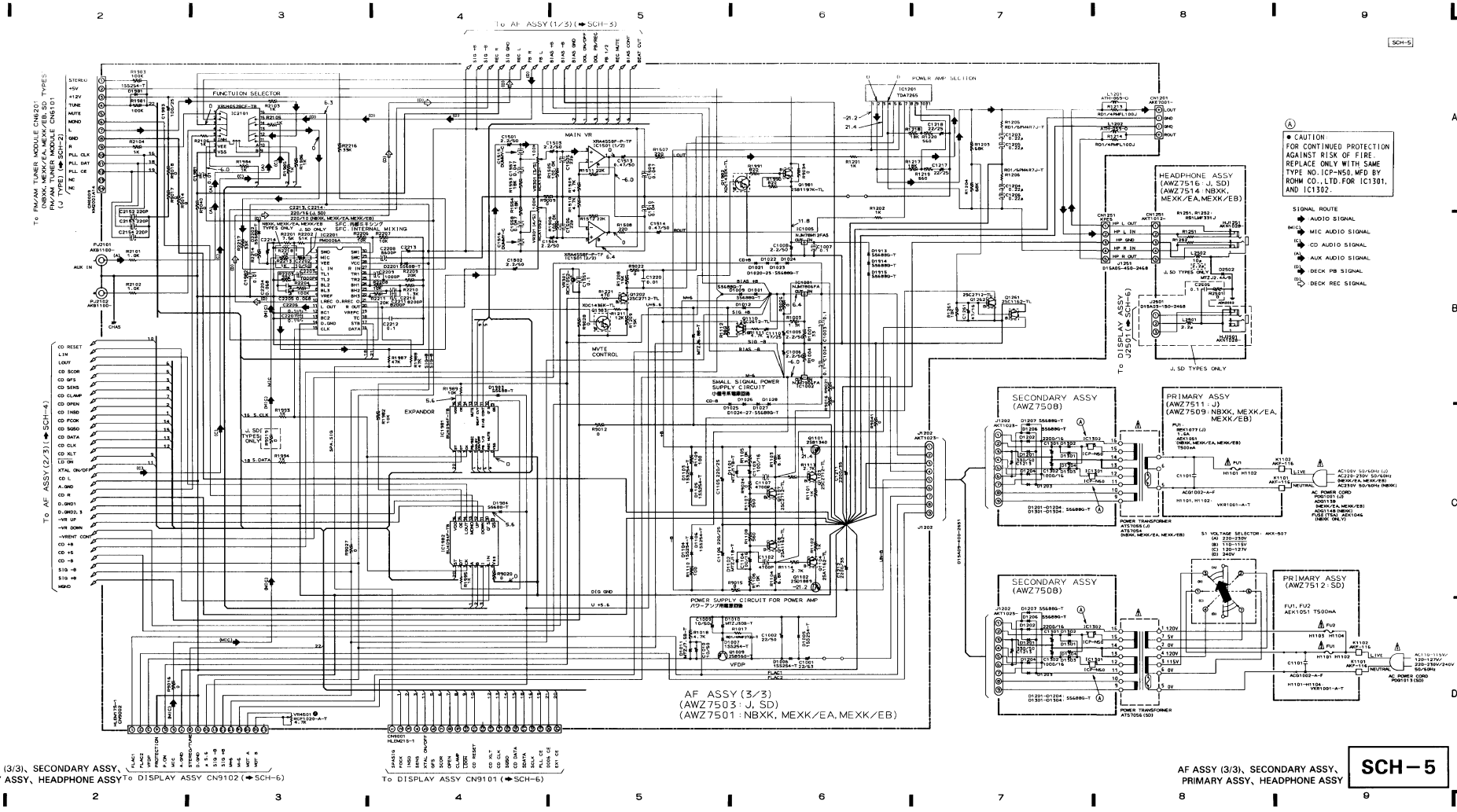


• CAUTION:
FOR CONTINUED PROTECTION AGAINST RISK OF FIRE, REPLACE ONLY WITH SAME TYPE NO. ICP-N50, MFD BY ROHM CO., LTD. FOR IC1301, AND IC1302.

SIGNAL ROUTE
- AUDIO SIGNAL
- MIC AUDIO SIGNAL
- CD AUDIO SIGNAL
- AUX AUDIO SIGNAL
- DECK PB SIGNAL
- DECK REC SIGNAL

PCB-2

• This diagram is viewed from the mounted parts side.

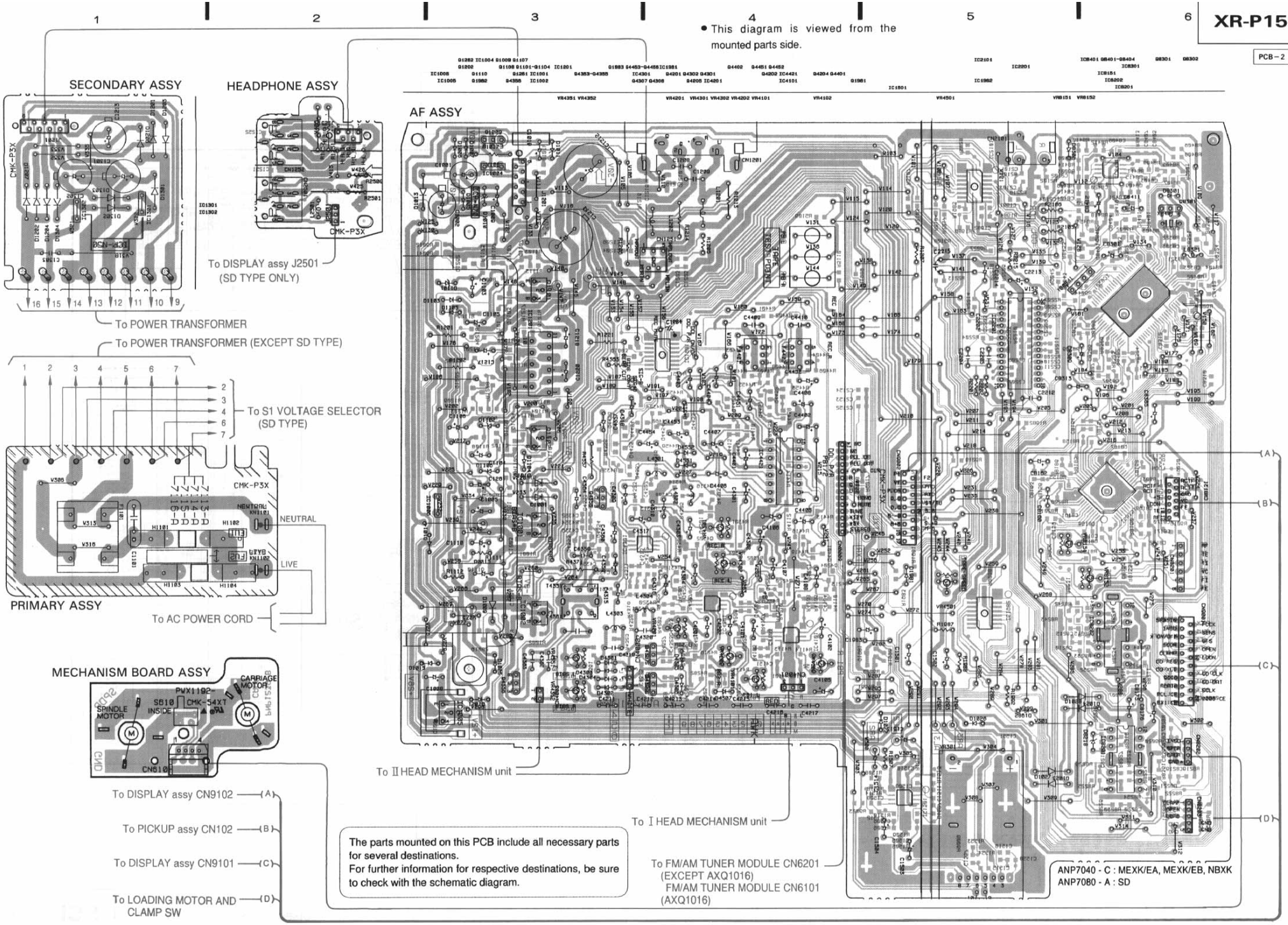


The parts mounted on this PCB include all necessary parts for several destinations.
For further information for respective destinations, be sure to check with the schematic diagram.

## 3.4 DISPLAY ASSY、EJECT SW ASSY、MECHANISM UNIT (2/2)

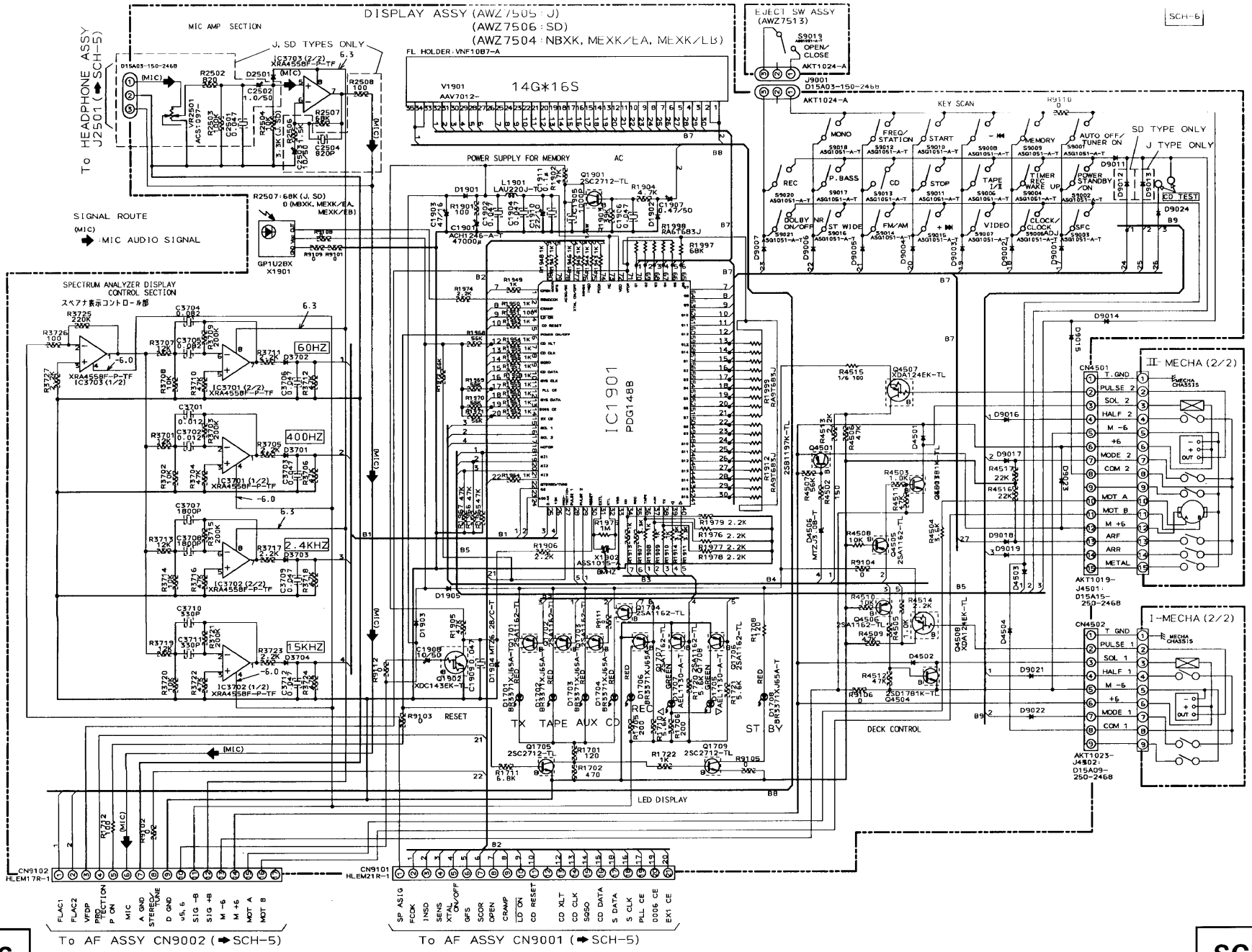




**SCH−6**

DISPLAY ASSY、EJECT SW ASSY、
MECHANISM UNIT (2/2)

DISPLAY ASSY、EJECT SW ASSY、
MECHANISM UNIT (2/2)

**SCH−6**

PCB – 3

• This diagram is viewed from the mounted parts side.

The parts mounted on this PCB include all necessary parts for several destinations.
For further information for respective destinations, be sure to check with the schematic diagram.

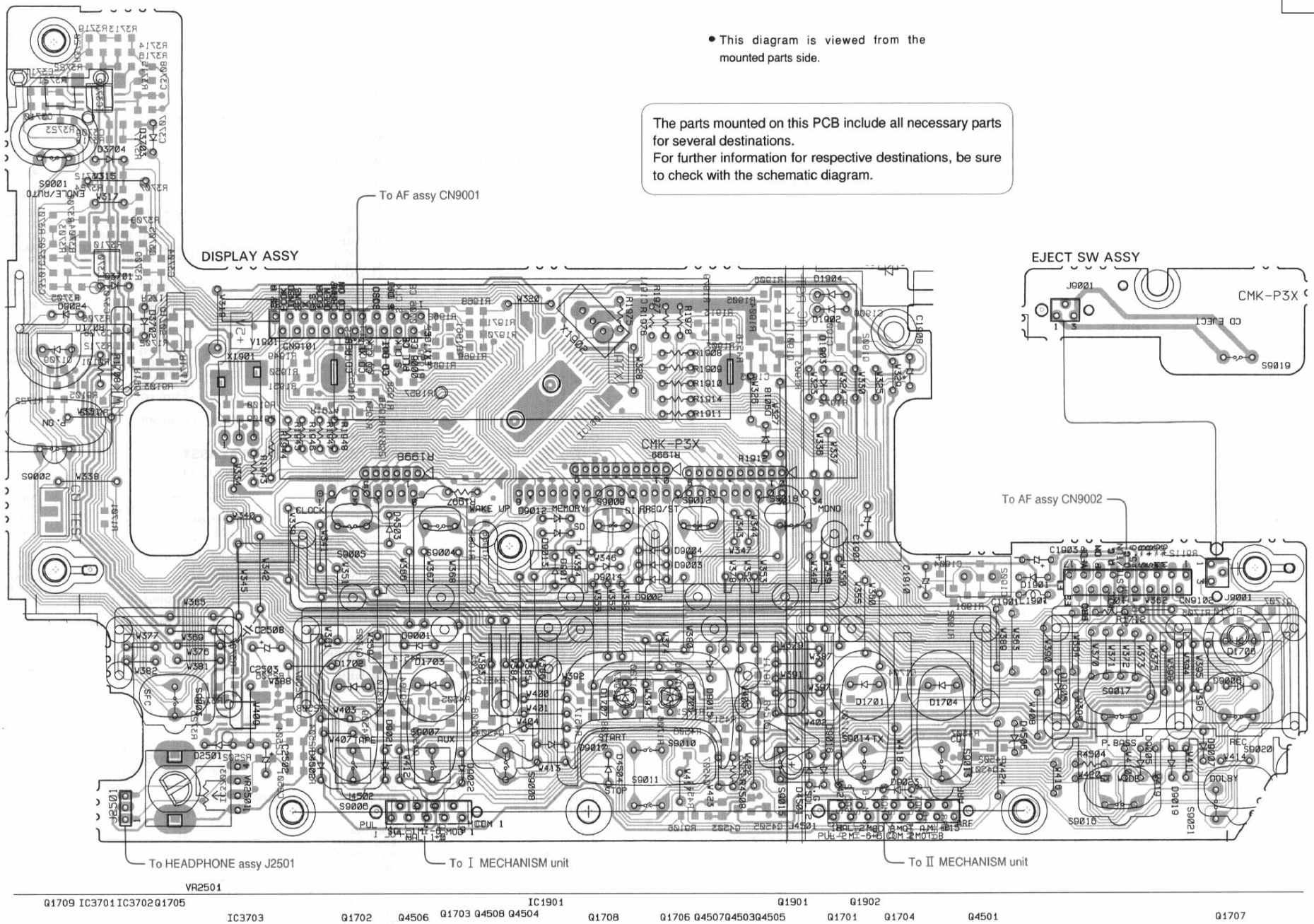

# 4. PCB PARTS LIST

*NOTES :*

- *Parts marked by "NSP" are generally unavailable because they are not in our Master Spare Parts List.*
- *The ⚠ mark found on some component parts indicates the importance of the safety factor of the part. Therefore, when replacing, be sure to use parts of identical designation.*
- *Parts marked by "◉" are not always kept in stock. Their delivery time may be longer than usual or they may be unavailable.*
- *When ordering resistors, first convert resistance values into code form as shown in the following examples.*

*Ex. 1* *When there are 2 effective digits (any digit apart from 0), such as 560 ohm and 47k ohm (tolerance is shown by J = 5%, and K = 10%).*

*560Ω → 56 × 10¹ → 561 ····· RD1/8PM[5][6][1] J*
*47kΩ → 47 × 10³ → 473 ····· RD1/4PS[4][7][3] J*
*0.5Ω → 0R5 ····· RN2H[0][R][5] K*
*1Ω → 010 ····· RS1P[0][1][0] K*

*Ex. 2* *When there are 3 effective digits (such as in high precision metal film resistors).*

*5.62kΩ → 562 × 10¹ → 5621 ····· RM1/4PC[5][6][2][1] F*

| Mark | No. | Description | Parts No. |
|---|---|---|---|
| **LIST OF ASSEMBLIES** | | | |
| NSP | | COMPLEX ASSY | AWK7113 |
| | | ├─AF ASSY | AWZ7501 |
| | | ├─DISPLAY ASSY | AWZ7504 |
| NSP | | ├─SECONDARY ASSY | AWZ7508 |
| | | ├─PRIMARY ASSY | AWZ7509 |
| NSP | | ├─EJECT SW ASSY | AWZ7513 |
| NSP | | └─HEADPHONE ASSY | AWZ7514 |
| | | FM/AM TUNER MODULE | AXQ3213 |
| NSP | | CD SINGLE MECHA ASSY | RXA1672 |
| NSP | | └─SERVO MECHANISM ASSY SL | AXA7017 |
| NSP | | └─MECHANISM BOARD ASSY | PWX1192 |
| **AF ASSY** | | | |
| SEMICONDUCTORS | | | |
| | IC1981, IC1982 | | BU4094BCF |
| | IC4421 | | CXA1101P |
| | IC8151 | | CXA1372Q |
| | IC8301 | | CXD2508AQ |
| | IC8201, IC8202 | | LA6520 |
| | IC1001 | | NJM7806FA |
| | IC1005 | | NJM78M12FA |
| | IC1002 | | NJM7906FA |
| | IC2201 | | PM0006A |
| | IC1201 | | TDA7265 |
| | IC1501, IC4101, IC4201, IC4301, IC8401 | | XRA4558F-P |
| | IC2101 | | XRU4052BCF |
| | Q1104, Q1108, Q1261, Q4201, Q4202 | | 2SA1162 |
| | Q4204, Q4401, Q4402 | | 2SA1162 |
| | Q1101 | | 2SB1340 |
| | Q1009 | | 2SB560 |
| | Q4356 | | 2SC2240 |
| | Q1103, Q1107, Q1202, Q1262 | | 2SC2712 |
| | Q4301, Q4302, Q4451–Q4454 | | 2SC2712 |
| | Q8401, Q8402 | | 2SC2712 |
| | Q4353, Q4354 | | 2SD1781K |
| | Q1102 | | 2SD1889 |
| | Q4355 | | 2SD2144S |
| | Q8301 | | 2SK246 |
| | Q4307, Q4308 | | 2SK373 |
| | Q4205, Q4357, Q4456 | | XDA124EK |
| | Q8302, Q8403, Q8404 | | XDA143EK |
| | Q4455 | | XDC124EK |
| | Q1983 | | XDC143EK |
| | D1007, D1103–D1106, D1981, D1984 | | 1SS254 |
| | D4301–D4307, D4551, D4552 | | 1SS254 |
| | D8301, D8302 | | 1SS254 |
| | D1101, D1102 | | MTZJ11B |
| | D1010 | | MTZJ30B |
| | D8218 | | MTZJ6.2B |
| | D1011 | | MTZJ7.5B |
| | D1001, D1005, D1006, D1009 | | S5688G |
| | D1012–D1015, D1021–D1028, D1983 | | S5688G |
| | D2201, D2202 | | S5688G |
| COILS AND FILTERS | | | |
| | L1201, L1202 (5.3μ H) | | ATH-059 |
| | L8321 | | LAU1R2J |
| | L4301, L4302 | | LTA472J |
| | L4303, L4304 | | LTA822J |
| | F4401, F4402 | | RTF1209 |
| TRANSFORMERS | | | |
| | T4351 | | ATX-043 |
| CAPACITORS | | | |
| | C4361 (2000pF/630V) | | ACE1020 |
| | C4319, C4320 | | CCCSL271K500 |
| | C4323, C4324, C8322 | | CCSQCH100D50 |
| | C8407–C8410 | | CCSQCH121J50 |
| | C1505, C1506, C8323 | | CCSQCH220J50 |
| | C4353 | | CCSQCH221J50 |
| | C8403–C8406 | | CCSQCH271J50 |
| | C8401, C8402 | | CCSQCH391J50 |
| | C4325, C4326 | | CCSQCH471J50 |
| | C8155 | | CCSQCH561J50 |
| | C4151, C4152, C4355 | | CCSQCH681J50 |
| | C4101, C4102, C4201, C4202 | | CEAS100M16 |
| | C1009, C1010, C4359, C4360, C4364 | | CEAS100M50 |
| | C4405, C4407, C4454 | | CEAS100M50 |
| | C4401, C4408, C8365 | | CEAS101M10 |
| | C1103, C1104 | | CEAS101M16 |
| | C1217, C1218 | | CEAS220M25 |
| | C1002, C4453 | | CEAS220M50 |
| | C1001 | | CEAS220M63 |
| | C2213, C2214, C8313 | | CEAS221M10 |
| | C1105, C1106 | | CEAS221M25 |
| | C1211, C1212 | | CEAS222M35 |
| | C1005, C1006, C1008, C1501–C1504 | | CEAS2R2M50 |
| | C4107, C4108 | | CEAS2R2M50 |
| | C4301–C4304, C4315, C4316 | | CEAS2R2M50 |
| | C4403, C4404, C4451, C4452 | | CEAS2R2M50 |
| | C8411, C8412 | | CEAS2R2M50 |
| | C4309, C4310, C8175, C8176 | | CEAS330M16 |
| | C8301 | | CEAS331M10 |
| | C4357 | | CEAS3R3M50 |
| | C4105, C4106, C4317, C4318 | | CEAS470M10 |
| | C1261, C4218 | | CEAS470M16 |
| | C8160, C8162 | | CEAS4R7M50 |
| | C8309, C1513, C1514 | | CEASR47M50 |
| | C4402, C4406 | | CEASR68M50 |
| | C1220 | | CKCYB103K50 |
| | C4363 | | CKCYB222K500 |
| | C4212–C4217 | | CKCYF473Z50 |
| | C2212 | | CKCYX104M16 |
| | C2203, C2209, C8171, C8310–C8312 | | CKSQYB102K50 |
| | C8321 | | CKSQYB102K50 |
| | C8306 | | CKSQYB152K50 |
| | C4313, C4314 | | CKSQYB182K50 |
| | C2152–C2154 | | CKSQYB221K50 |
| | C4307, C4308 | | CKSQYB273K50 |
| | C8170 | | CKSQYB332K50 |
| | C1102, C1107, C8172 | | CKSQYB472K50 |
| | C1557, C1558 | | CKSQYB473K50 |
| | C2208 | | CKSQYB562K50 |
| | C4103, C4104, C4203, C4204 | | CKSQYB682K50 |
| | C2210, C2211 | | CKSQYB822K50 |
| | C4311, C4312 | | CKSQYB823K25 |
| | C1981, C1982, C4352, C4354, C8157 | | CKSQYF103Z50 |
| | C8164, C8167, C8169, C8207, C8210 | | CKSQYF103Z50 |
| | C8215, C8218–C8220, C8308, C8361 | | CKSQYF103Z50 |
| | C1003, C1004, C1007, C1551 | | CKSQYF104Z50 |
| | C2206, C2207, C8158, C8159, C8161 | | CKSQYF104Z50 |
| | C8163, C8302, C8303, C8324, C8362 | | CKSQYF104Z50 |
| | C8420, C8421 | | CKSQYF104Z50 |
| | C4356 | | CKSQYF153Z50 |
| | C1203–C1206 | | CKSQYF224Z25 |
| | C8156, C8168 | | CKSQYF333Z50 |
| | C1509, C1510, C8307 | | CKSQYF473Z50 |
| | C4409, C4410 | | CQMA103J50 |
| | C4358 | | CQMA123K250 |
| | C4362 | | CQMA562K400 |
| | C2204, C2205 | | CQMA683J50 |
| RESISTORS | | | |
| | VR4301, VR4302, VR4501 (4.7k) | | RCP1020 |
| | VR8151, VR8152 (22k) | | RCP1046 |
| | VR4351, VR4352 (220k) | | RCP1049 |
| | VR4101, VR4102, VR4201, VR4202 (470Ω) | | RCP1120 |
| | VR301 (100k–B x 2) | | RCX7010 |
| | R4371 | | RD1/2PM470J |
| | R4357 | | RD1/2PM6R8J |
| | R1201, R1202 | | RD1/4PM102J |
| | R1221 | | RD1/4PM123J |
| | R1206 | | RD1/4PM4R7J |
| | R1017 | | RD1/4PMF272J |
| | R1213, R1214 | | RD1/4PMFL100J |
| | R4281 | | RD1/6PM101J |
| | R1993–R1995, R2105, R2106 | | RD1/6PM102J |
| | R1207 | | RD1/6PM103J |
| | R4363 | | RD1/6PM152J |
| | R1507 | | RD1/6PM221J |
| | R1987, R1988 | | RD1/6PM473J |
| | R1205 | | RD1/6PM4R7J |
| | R2202 | | RD1/6PM513J |
| | R2201 | | RD1/6PM752J |
| | Other Resistors | | RS1/10S□□□J |
| OTHERS | | | |
| | CN8131 | CONNECTOR | 12FMZ-ABT |
| | CN8202 | MT CONNECTOR 4P | 173981-4 |
| | CN8203 | MT CONNECTOR 5P | 173981-5 |
| | CN2101 | PIN JACK 2P (VIDEO/AUX) | AKB1100 |
| | CN1201 | SPEAKER TERMINAL 4-P | AKE7001 |
| | | CABLE HOLDER | AKT1023 |
| | CN4003 | 2P TOP POST | B2B-EH |
| | CN4002 | 3P TOP POST | B3B-EH |
| | CN4001 | 3P TOP POST | B3B-EH-R |
| | CN9002 | FFC CONNECTOR 17P | HLEM17S-1 |
| | CN9001 | FFC CONNECTOR 21P | HLEM21S-1 |
| | CN9 | 14P PLUG | KM200IA14 |
| | CN1251 | CONNECTOR (5P) | KPE5 |
| | | HEAT SINK | PNB1233 |
| | CN8201 | 6P SIDE POST | VKN-004 |
| | X8401 | (33.8688MHz) | ASS7000 |
| **DISPLAY ASSY** | | | |
| SEMICONDUCTORS | | | |
| | IC1901 | | PDG148B |
| | IC3701–IC3703 | | XRA4558F-P |
| | Q1701–Q1704, Q1706–Q1708 | | 2SA1162 |
| | Q4505, Q4506 | | 2SA1162 |
| | Q4501 | | 2SB1197K |
| | Q1705, Q1709, Q1901 | | 2SC2712 |
| | Q4503, Q4504 | | 2SD1781K |
| | Q4507, Q4508 | | XDA124EK |
| | Q1902 | | XDC143EK |
| | D1901–D1903, D1905, D3701–D3704 | | 1SS254 |
| | D4501–D4504, D9001–D9007, D9011 | | 1SS254 |
| | D9014–D9019, D9021–D9024 | | 1SS254 |
| | D1705, D1707 | | AEL1130 |
| | D1701–D1704, D1706, D1708 | | BR3371XJ30A |
| | D4506 | | MTZJ3.0B |
| | D1904 | | MTZJ6.2B/C |
| COILS AND FILTERS | | | |
| | L1901 | | LAU220J |
| SWITCHES AND RELAYS | | | |
| | S9001–S9018, S9020, S9021 | | ASG1051 |
| CAPACITORS | | | |
| | C1901 (4700μ F) | | ACH1246 |
| | C1905 | | CCSQCH102J50 |
| | C3710, C3711 | | CCSQCH331J50 |
| | C1908 | | CEAS100M50 |
| | C1910 | | CEAS220M10 |
| | C1903 | | CEAS470M16 |
| | C1907 | | CEASR47M50 |
| | C3701, C3702 | | CKSQYB123K50 |
| | C3707, C3708 | | CKSQYB182K50 |
| | C3704, C3705 | | CKSQYB823K25 |

| Mark | No. | Description | Parts No. |
|---|---|---|---|
| | C1902, C1904, C1906, C1909, C1911 | | CKSQYF473Z50 |
| | C3703, C3706, C3709, C3712 | | CKSQYF473Z50 |
| RESISTORS | | | |
| | R1944 | | RD1/4PM102J |
| | R1712 | | RD1/6PM101J |
| | R1908–R1910, R1943, R1945–R1948 | | RD1/6PM102J |
| | R4508 | | RD1/6PM103J |
| | R1975 | | RD1/6PM105J |
| | R1708 | | RD1/6PM121J |
| | R1976–R1978 | | RD1/6PM222J |
| | R1911, R1914 | | RD1/6PM332J |
| | R4504 | | RD1/6PM362J |
| | Other Resistors | | RS1/10S□□□J |
| OTHERS | | | |
| | V1901 | FL TUBE | AAV7012 |
| | | CABLE HOLDER | AKT1023 |
| | | REMOTE RECEIVER UNIT | GP1U28X |
| | CN9102 | FFC CONNECTOR 17P | HLEM17R–1 |
| | CN9101 | FFCCONNECTOR 21P | HLEM21R–1 |
| | | FL HOLDER | VNF1087 |
| | X1902 | (8.00MHZ) | ASS1015 |

## SECONDARY ASSY

| Mark | No. | Description | Parts No. |
|---|---|---|---|
| SEMICONDUCTORS | | | |
| | IC1301, IC1302 | | ICP–N50 |
| | D1201–D1204, D1206, D1207 | | S5688G |
| | D1301–D1304 | | S5688G |
| CAPACITORS | | | |
| | C1302 | | CEAS102M16 |
| | C1301 | | CEAS222M16 |
| | C1213 | | CEAS331M50 |
| OTHERS | | | |
| | | CABLE HOLDER | AKT1023 |

## PRIMARY ASSY

| Mark | No. | Description | Parts No. |
|---|---|---|---|
| CAPACITORS | | | |
| | C1101 (0.01μ F/400V) | | ACG1002 |
| OTHERS | | | |
| | H1101, H1102 | FUSE HOLDER | VKR1001 |

## EJECT SW ASSY

| Mark | No. | Description | Parts No. |
|---|---|---|---|
| SWITCHES AND RELAYS | | | |
| | S9019 | | ASG1051 |

## HEADPHONE ASSY

| Mark | No. | Description | Parts No. |
|---|---|---|---|
| SEMICONDUCTORS | | | |
| | D2502 | | MTZJ2.4A/B |
| COILS AND FILTERS | | | |
| | L2502 | | LAU100J |
| RESISTORS | | | |
| | R1251, R1252 | | RS1LMF331J |
| | Other Resistors | | RS1/10S□□□J |
| OTHERS | | | |
| | CN1252 | JACK | AKN1028 |
| | | CABLE HOLDER | AKT1012 |

## FM/AM TUNER MODULE

| Mark | No. | Description | Parts No. |
|---|---|---|---|
| SEMICONDUCTORS | | | |
| | IC6201 | | LA1836M |
| | IC6202 | | LM7001J |
| | Q6102 | | 2SC2223 |
| | Q6203 | | 2SC2235 |
| | Q6202 | | 2SC2712 |
| | Q6103, Q6214 | | 2SC2714 |
| | Q6201 | | 2SK208 |
| | Q6104 | | 2SK302 |
| | Q6101 | | 3SK194 |
| | Q6204 | | XDA124EK |
| | Q6217 | | XDC124EK |
| | D6101, D6102 | | 1T33 |
| COILS AND FILTERS | | | |
| | L6104 | | ATC1003 |
| | L6101 | | ATC1020 |
| | L6102 | | ATC1021 |
| | L6207 (10.7MHZ) | | ATE1013 |
| | F6203, F6204 | | ATF–119 |
| | F6101 | | ATF–155 |
| | F6202 (450KHZ) | | ATF1155 |
| | L6103 (2.2μ H) | | ATH1043 |
| | L6202, L6203, L6208 | | LCTA2R2J3225 |
| TRANSFORMERS | | | |
| | T6101 | | ATE–063 |
| CAPACITORS | | | |
| | C6234, C6236, C6270 (1μ F/16V) | | ACG1051 |
| | C6107 | | CCSCH010C50 |
| | C6229 | | CCSCH821J50 |
| | C6110 | | CCSQCH020C50 |
| | C6101 | | CCSQCH050C50 |
| | C6108, C6203, C6269 | | CCSQCH101J50 |
| | C6111, C6116, C6208, C6221, C6222 | | CCSQCH150J50 |
| | C6115 | | CCSQCH330J50 |
| | C6114 | | CCSQRH080D50 |
| | C6113 | | CCSQRH180J50 |
| | C6105 | | CCSQTH150J50 |
| | C6261 | | CEAS010M50 |
| | C6224, C6246, C6262 | | CEAS100M50 |
| | C6216, C6217 | | CEAS330M16 |
| | C6231, C6233 | | CEAS3R3M50 |
| | C6219 | | CEAS470M10 |
| | C6243–C6245 | | CEAS470M16 |
| | C6227 | | CEAS470M25 |
| | C6238 | | CEJA100M16 |
| | C6249, C6250 | | CEJA4R7M35 |
| | C6215 | | CFTXA103J50 |
| | C6214 | | CFTXA224J50 |
| | C6103, C6106, C6112, C6204 | | CKSQYB102K50 |
| | C6102, C6109, C6117, C6210, C6264 | | CKSQYB103K50 |
| | C6213 | | CKSQYB223K50 |
| | C6230 | | CKSQYB273K50 |
| | C6228 | | CKSQYB472K50 |
| | C6209, C6237, C6265, C6267 | | CKSQYB473K50 |
| | C6252 | | CKSQYB822K50 |
| | C6212, C6218 | | CKSQYF103Z50 |
| | C6220, C6226, C6239, C6242, C6255 | | CKSQYF223Z50 |
| | C6235 | | CKSQYF224Z25 |
| | C6225, C6241, C6266 | | CKSQYF473Z50 |
| | C6232 | | CKSYB273K50 |
| | C6251 | | CKSYB822K50 |

| Mark | No. | Description | Parts No. |
|---|---|---|---|
| | C6223 | | CKSYF103Z50 |
| | C6263 | | CKSYF473Z50 |
| RESISTORS | | | |
| | VR6201 | (10k) | ACP1056 |
| | VR6202 | | VRTB6VS223 |
| | R6299, R6300 | | RD1/6PM102J |
| | R6113, R6116, R6118, R6268–R6271 | | RS1/8S000J |
| | R6275, R6276, R6278, R6283, R6284 | | RS1/8S000J |
| | R6290, R6293, R6294, R6297 | | RS1/8S000J |
| | R6243, R6244 | | RS1/8S101J |
| | R6211 | | RS1/8S103J |
| | R6237 | | RS1/8S182J |
| | R6209 | | RS1/8S221J |
| | R6239 | | RS1/8S332J |
| | R6101 | | RS1/8S470J |
| | Other Resistors | | RS1/10S□□□J |
| OTHERS | | | |
| | BN6201 | 2P TERMINAL WITH PAL | AKA1017 |
| | CN6201 | | KP200IA14L |
| | | AM RF TUNING BLOCK | AXX1041 |
| | X6203 | (7.200MHZ) | ASS1042 |
| | X6201 | (456KHZ) | ASS1066 |
| | X6202 | (450KHZ) | ATF1027 |

## MECHANISM BOARD ASSY

SWITCHES AND RELAYS

| | | | |
|---|---|---|---|
| | S610 | | DSG1016 |

OTHERS

| | | | |
|---|---|---|---|
| | CN610 | MT CONNECTOR 4P | 173979–4 |

# 5. ADJUSTMENTS

## 5.1 TUNER SECTION

### FM Tuner Section

- Set the mode selector to FM BAND.
- Connect the wiring as shown in Fig. 1−1.

| Step No. | Adjustment Title | FM SG (1kHz, ±75kHz dev.) | | Reception Frequency Display | Adjustment Location | Specifications |
|---|---|---|---|---|---|---|
| | | Frequency (MHz) | Level (dBμV) | | | |
| 1 | Center Adjustment | 98 Non modulation | 80 or more | —— | L6207 | Adjust so that the DC voltage between IC6201-Pin 4 and Pin 28 (or ⊕ leads of C6224 and C6261) becomes 0V±50mV. |
| 2 | Front End Sensitivity Adjustment | 98 | Low input (0 to 30) | 98MHz | L6102 T6101 | Adjust so that the DC voltage between the IC6201-Pin 12 and GND (or ⊕ leads of C6238 and GND) becomes at maximum level. |
| 3 | Stereo Distortion | 98 | 80 | 98MHz | T6101 | Minimize the distortion with 1/8 rotation of the core. |
| 4 | TUNED IND. Lighting Level | 98 | 15±2 | 98MHz | VR6201 | Adjust so that the indicator of TUNED IND. starts to light up. |

*Notes:*

- *Before adjusting, make sure there is no gap between L6101 and L6102. If there is a gap between them, bring them into contact with each other first, and then make adjustments.*
- *Make indicator adjustments in order of AM → FM.*

### AM Tuner Section

- Set the mode selector to AM BAND.
- Connect the wiring as shown in Fig. 1−1.

| Step No. | Adjustment Title | AM SG (400Hz, 30% Mod.) | | Reception Frequency Display | Adjustment Location | Specifications |
|---|---|---|---|---|---|---|
| | | Frequency (kHz) | Level (dBμV/m) | | | |
| 1 | TUNED IND. Lighting Level | 999*1 | 47 (±2dB) | 999kHz*1 | VR6202 | Adjust so that the indicator of TUNED IND. starts to light up. |

**1: For the area using 10 kHz step, frequencies should be 1000 kHz.*

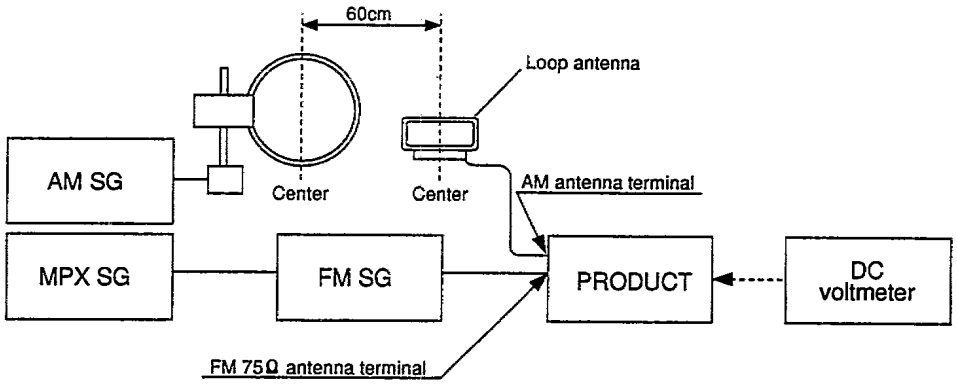


Fig. 1−1 AM and FM Adjustment Wiring Diagram

FM/AM TUNER MODULE (AXQ3213 and AXQ1012)

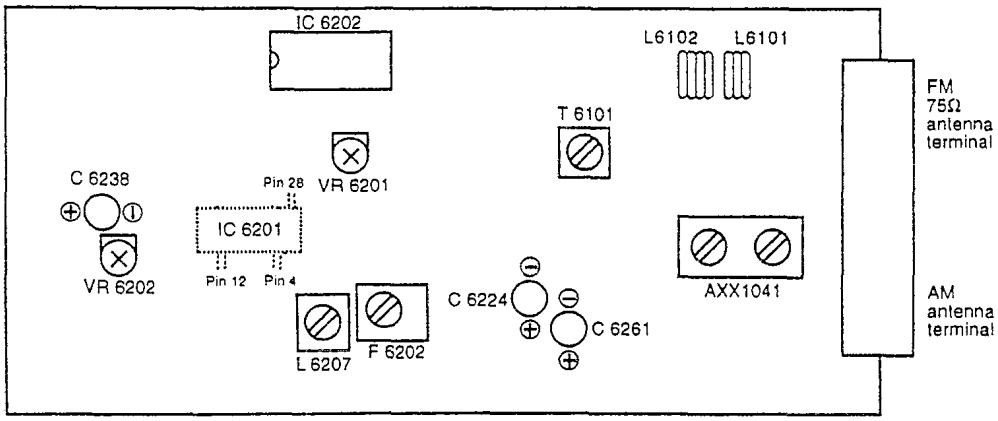


Fig. 1−2 Adjustment Points

## 5.2 CASSETTE DECK SECTION

- Adjustment points and test points are shown in Fig. 2−2 and Fig. 2−4.

■ When adjusting the Head azimuth, remove the azimuth cover (L) and (R) before adjustment.

1. Open the cassette doors (L) and (R).
2. Insert your fingers into the cassette doors, grasp both ends of the azimuth cover with your fingers, and push it a little to the front. When the azimuth cover is pushed too much at this time, the cassette doors possibly may not close.
3. Confirm that the azimuth covers (L) and (R) have been moved a little to the front, close the cassette doors (L) and (R), and remove the azimuth covers.

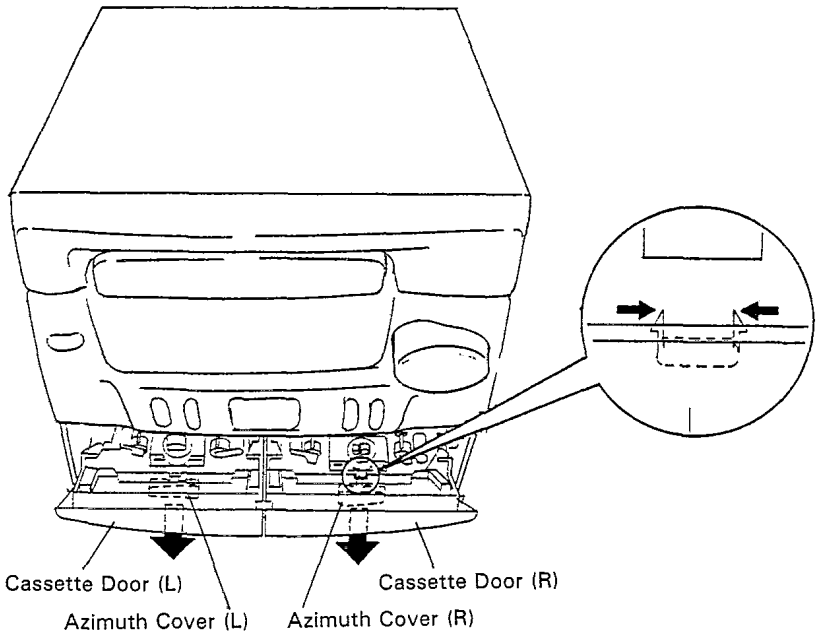


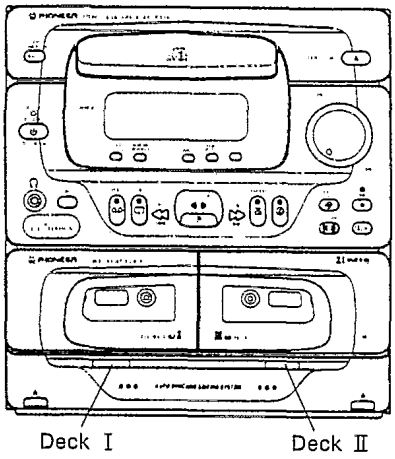

## Mechanical Adjustment

- Set the TAPE function.
- Test tape: STD−301 (3kHz, 30min).

### 1. Tape Speed Adjustment

| No. | Mode | Test Tape | Adjusting Points | Measurement Points | Adjustment Procedure | Remarks |
|---|---|---|---|---|---|---|
| 1 | Deck I PLAY | STD−301 (Playback: 3kHz) | AF Assy VR4501 | TAPE TEST POINT (Rch) (AF Assy) | Press the PLAY SW and adjust so that the reading becomes 3000Hz±20Hz. Confirm that wow & flutter level is below 0.2% (in the reverse direction, confirm that the reading is within 3000Hz±60Hz). | |

## Electrical Adjustment

### Check the following before starting.

1. Confirm that the tape speed adjustment has been completed.
2. Clean the heads and demagnetize them using a head eraser.
3. Set the measurement level to 0 dBV = 1 Vrms.
4. Use the specified tape for adjustment. Use the labeled (A) side of the test tape.
   STD−331E: For playback adjustment
   STD−631 or STD−632: Normal blank tape
5. Provide yourself with the following measuring devides:
   - AC millivoltmeter
   - Low-frequency oscillator
   - Attenuator
   - Oscilloscope
6. Adjust both right and left channels unless otherwise specified.
7. Turn the DOLBY NR switch off unless otherwize specified.
8. Warm up the unit for several minutes before adjustment. In particular, be sure to warm up the unit in the REC/PLAY mode for 3 to 5 minutes before starting recording/playback frequency characteristics adjustment.
9. Always follow the indicated adjustment order. Otherwise, a complete adjustment may not be achieved.

### Playback Adjustment (Decks I and II)

1. Head Azimuth Adjustment
2. Playback Level Adjustment

### Recording Adjustment (Deck II)

1. Bias Oscillation Frequency Adjustment
2. Recording Bias Adjustment
3. Recording Level Adjustment.
4. ALC Operation Check

**As the reference recording level is 250nwb/m for STD−331E, the recording level will be higher by 4 dB for STD−331B (160nwb/m). When adjusting, pay carefull attention to the type of tape used.*

*Dolby noise reduction manufactured under license from Dolby Laboratories Licensing Corporation.*
*"DOLBY" and the double-D symbol DD are trademarks of Dolby Laboratories Licensing Corporation.*

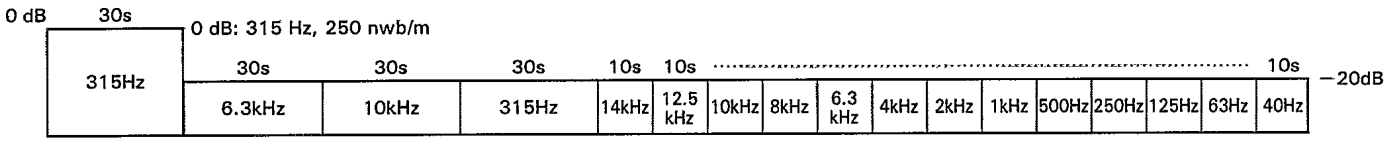


Fig. 2−1 STD−331E Test Tape

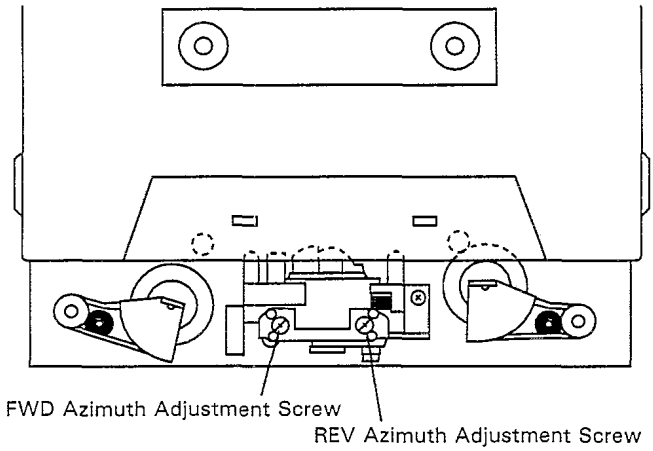


Fig. 2−2 Head Azimuth Adjustment

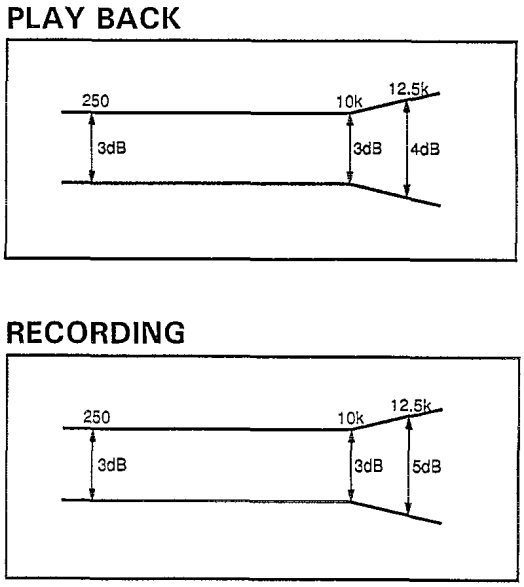


Fig. 2−3 Frequency Characteristics

## ● Playback Adjustment

### 1. Head Azimuth Adjustment

- This unit is equipped with auto tape selector.
- Do not switch between forward and reverse operation with the screwdriver inserted.

| Step | Tape Selector (AUTO) | Mode | Input Signal/ Test Tape | Adjusting Points | | Measurement Points | Adjustment Value | Remarks |
|---|---|---|---|---|---|---|---|---|
| 1 | NORMAL | PLAY | STD−331E test tape (Playback: 10kHz, −20dB) | Deck I | Head azimuth adjustment screw (Fig. 2−2) | TAPE TEST POINT (L, Rch) (AF Assy) | Max. playback signal level | After adjustment, apply lock paint to the head azimuth adjustment screw. |
| | | | | Deck II | | | | |

### 2. Playback Level Adjustment

- Since this adjustment determines playback Dolby NR level, perform it carefully.

| Step | Tape Selector (AUTO) | Mode | Input Signal/ Test Tape | Adjusting Points | | Measurement Points | Adjustment Value | Remarks |
|---|---|---|---|---|---|---|---|---|
| 1 | NORMAL | PLAY | STD−331E test tape (Playback: 315Hz, 0dB) | Deck I | VR4101 (Lch) VR4102 (Rch) | TAPE TEST POINT (L, Rch) (AF Assy) | −4.2 dBV | |
| | | | | Deck II | VR4201 (Lch) VR4202 (Rch) | | | |

## ● Recording Adjustment

### 1. Bias Oscillation Frequency Adjustment

| Step | Tape Selector (AUTO) | Mode | Input Signal/ Test Tape | Adjusting Points | | Measurement Points | Adjustment Value | Remarks |
|---|---|---|---|---|---|---|---|---|
| 1 | NORMAL | REC | Load the STD−631 or STD−632 test tape and set the recording mode. | Deck I | — | — | Oscillation frequency to be 105.0kHz ±2kHz. | When the power is turned ON while the MONO button is depressed, the frequency will decrease 2−3 kHz. |
| | | | | Deck II | T4351 | Between Ⓐ point in Fig. 2−4 and GND. | | |

### 2. Recording Bias Adjustment

● After the adjustment, caution should be exercised so as not to become under bias by checking the distortion rate.

| Step | Tape Selector (AUTO) | Mode | Input Signal/Test Tape | Adjusting Points | | Measurement Points | Adjustment Value | Remarks |
|---|---|---|---|---|---|---|---|---|
| 1 | NORMAL | REC | Input a 315Hz signal to the VIDEO/AUX IN terminal and set the input selector to VIDEO. | Deck I | — | TAPE TEST POINT (L, Rch) (AF Assy) | −25.2 dBV | |
| | | | | Deck II | Input signal level | | | |
| 2 | NORMAL | REC → PLAY | Load the STD−631 or STD−632 test tape and record/playback the 315Hz and 10kHz signals. (see the Note below) | Deck I | — | TAPE TEST POINT (L, Rch) (AF Assy) | Repeat adjustment until playback level of the 10kHz signal is within 0±0.5dB from that of the 315Hz signal. | |
| | | | | Deck II | VR4351 (Lch) VR4352 (Rch) | | | |

*Note: Set the 10 kHz input signal level to the same value as the 315 Hz input signal level of step 1.*

### 3. Recording Level Adjustment

| Step | Tape Selector (AUTO) | Mode | Input Signal/Test Tape | Adjusting Points | | Measurement Points | Adjustment Value | Remarks |
|---|---|---|---|---|---|---|---|---|
| 1 | NORMAL | REC | Input a 315Hz signal to the VIDEO/AUX IN terminal and set the input selector to VIDEO. | Deck I | Input signal level | TAPE TEST POINT (L, Rch) (AF Assy) | −8.2 dBV | |
| | | | | Deck II | | | | |
| 2 | NORMAL | REC → PLAY | STD−631 or STD−632 test tape and record/playback the 315Hz signal. | Deck I | — | TAPE TEST POINT (L, Rch) (AF Assy) | Repeat recording, playback and adjustment until playback level of the 315Hz signal becomes −8.2dBV. | |
| | | | | Deck II | VR4301 (Lch) VR4302 (Rch) | | | |

### 4. ALC Operation Check

| Step | Tape Selector (AUTO) | Mode | Input Signal/Test Tape | Adjusting Points | Measurement Points | Adjustment Value | Remarks |
|---|---|---|---|---|---|---|---|
| 1 | NORMAL | REC/ PAUSE | Input a 315Hz signal to the VIDEO/AUX IN terminal and set the input selector to VIDEO. | Input signal level | TAPE TEST POINT (L, Rch) (AF Assy) | −8.2 dBV | |
| 2 | | | | Set to a level +10dB above the input level at step 1. | | −3.2±2.5dBV | |



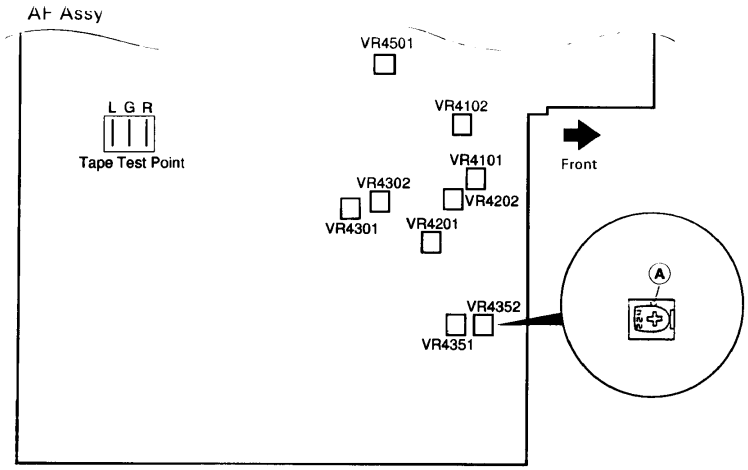


Fig. 2−4 Adjusting Points and Measurement Points

## 5.3 CD SECTION

### ■ Adjustment Methods

If a disc player is adjusted incorrectly or inadequately, it may malfunction or not work at all even though there is nothing at all wrong with the pickup or the circuitry. Adjust correctly following the adjustment procedure.

### ● Adjustment Items/Verification Items and Order

If the specified values cannot be obtained or no adjustment is possible by performing the verifications or adjustments described in steps 1−4, the pickup block may be defective.

| Step | Item | Test Point | Adjustment Location |
|---|---|---|---|
| 1 | Focus offset verification | CN8201, Pin6 (FE) | None |
| 2 | Tracking error balance verification | CN8201, Pin2 (TE) | None |
| 3 | Pickup radial/tangential direction tilt adjustment | CN8201, Pin1 (RF) | Radial tilt adjustment screw, Tangential tilt adjustment screw |
| 4 | RF level verification | CN8201, Pin1 (RF) | None |
| 5 | Focus servo loop gain adjustment | CN8201, Pin5 (FI)<br>CN8201, Pin6 (FE) | VR8152 (FOCUS) |
| 6 | Tracking servo loop gain adjustment | CN8201, Pin3 (TI)<br>CN8201, Pin2 (TE) | VR8151 (TRACKING) |

**Abbreviation Table**

FE : Focus Error
TE : Tracking Error
FI : Focus In
TI : Tracking In

### ● Measuring Instruments and Tools

1. Dual trace oscilloscope (10 : 1 probe)
2. Low-frequency oscillator
3. Test disc (YEDS−7)
4. Low pass filter (39kΩ + 0.001μF)
5. Resistor (100kΩ)
6. 8 cm disc (With at least about 20 minutes of recording)
7. Ball point hexagon wrench (GGK1002)
8. Standard tools



### ● Test Point and Adjustment Variable Resistor Positions

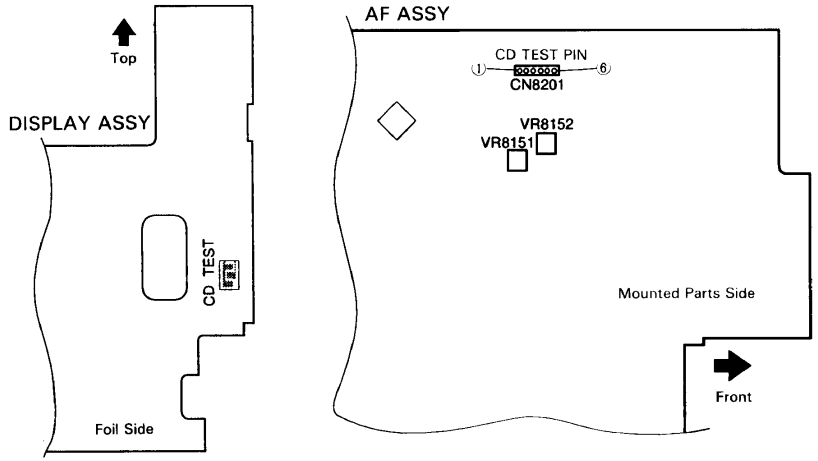


Fig. 3−1 Adjustment Location

### ● Notes

1. Use a 10 : 1 probe for the oscilloscope.
2. All the knob positions (settings) for the oscilloscope in the adjustment procedures are for when a 10 : 1 probe is used.
3. GND of the oscilloscope connect to CN8201, pin4 (VC). If GND is shorted to the ground of the product, the product should be damaged.

### ● Test Mode

These models have a test mode so that the adjustment and checks required for service can be carried out easily. When these models are in test mode, the keys on the front panel work differently from normal. Adjustments and checks can be carried out by operating these keys with the correct procedure. For these models, all adjustments are carried out in test mode.

**[Setting these models to test mode]**

How to set this model into test mode.
1. When the Power switch to activated, set the FUNCTION button to CD stop mode.
2. Short-circuit between both CD TEST points. (See Fig. 3−1)

When the test mode is set correctly, the display is different from what it usually is when the power is turned on. If the display is still the same as usual, test mode has not been set correctly, so repeat Steps 1−2.

[Release from test mode]

Here is the procedure for releasing the test mode:
1. Press the STOP key and stop all operations.
2. Turn off the power switch on the front panel.

[Operations of the keys in test mode]

| Code | Key Name | Function in Test Mode | Explanation |
|---|---|---|---|
| DD | DOLBY NR ON/OFF | Focus servo close | The laser diode is lit up and the focus actuator is lifted up, then lowered slowly and the focus servo is closed at the point where the objective lens is focused on the disc.<br>With the player in this state, if you lightly rotate the stopped disc by hand, you can hear the sound the focus servo.<br>If you can hear this sound, the focus servo is operating correctly. If you press this key with no disc mounted, the laser diode lights up, the focus actuator is pulled up, then the actuator is lowered and raised three times and returned to its original position. |
| ◁ ▷ | START | Spindle servo ON | Starts the spindle motor in the clockwise direction and when the disc rotation reaches the prescribed speed (about 500rpm at the inner periphery), sets the spindle servo in a closed loop.<br>Be careful. Pressing this key when there is no disc mounted makes the spindle motor run at the maximum speed.<br>If the focus servo does not go correctly into a closed loop or the laser light shines on the mirror section at the outermost periphery of the disc, the same symptom is occurred. |
| | | Tracking servo close/open | Pressing this key when the focus servo and spindle servo are operating correctly in closed loops puts the tracking servo into a closed loop, displays the track number being played back and the elapsed time on the front panel, and outputs the playback signal.<br>If the elapsed time is not displayed or not counted correctly or the audio is not played back correctly, it may be that the laser is shining on the section with no sound recorded at the outer edge of the disc, that something is out of adjustment, or that there is some other problem.<br>This key is a toggle key and open/close the tracking servo alternately. This key has no effect if no disc is mounted. |

| Code | Key Name | Function in Test Mode | Explanation |
|---|---|---|---|
| − ◁◁ ▯◁◁ | FAST REVERSE/ TRACK SEARCH | Carriage reverse (inwards) | Moves the pickup position toward the inner diameter of the disc. When this key is pressed with the tracking servo in a closed loop, the tracking servo automatically goes into an open loop. Since the motor does not automatically stop at the mechanical end point in test mode, be careful with this operation. |
| + ▷▷ ▷▷▯ | FAST FORWARD/ TRACK SEARCH | Carriage forward (outwards) | Moves the pickup position toward the outer diameter of the disc. When this key is pressed with the tracking servo in a closed loop, the tracking servo automatically goes into an open loop. Since the motor does not automatically stop at the mechanical end point in test mode, be careful with this operation. |
| □ | STOP | Stop | Initializes and the disc rotation stops.<br>The pickup and disc remain where they are when this key is pressed. |
| △ | OPEN/CLOSE | Disc tray open/close | Open/close the disc tray. This key is a toggle key and open/close tray alternately.<br>Pressing this key when the disc is turning stops the disc, then opens the tray.<br>This key operation does not affect the position of the pickup. |

[How to playback a disc in test mode]

In test mode, since the servos operate independently, playing back a disc requires that you operate the keys in the correct order to close the servos.
Here is the key operation sequence for playing back a disc in test mode.

DOLBY NR ▯▯ — Lights up the laser diode and closes the focus servo.

⇩

START ◁ ▷ — Starts the spindle motor and closes the spindle servo.

⇩

START ◁ ▷ — Closes the tracking servo.

Wait at least 2−3 seconds between each of these operations.

## 1. Focus Offset Verification

| | | | |
|---|---|---|---|
| ● Objective<br>● Symptom when out of adjustment | Verify the DC offset for the focus error amp.<br>The model does not focus in and the RF signal is dirty. | | |
| ● Measurement Instrument Connections | Connect the oscilloscope to CN8201, Pin6 (FE) and GND is to CN8201, Pin4 (VC).<br>[Settings] 5mV/division<br>10ms/division<br>DC mode | ● Player State<br>● Adjustment Location<br>● Disc | Test mode, stopped (just the Power switch on)<br>None<br>None needed |
| [Procedure]<br>Verify the DC voltage at CN8201, Pin6 (FE) is 0±50mV. | | | |

*Note: If the specified values cannot be obtained or no adjustment is possible by performing the verifications or adjustments described in adjustment items 1−4, the pickup block may be defective.*

## 2. Tracking Error Balance Verification

| | | | |
|---|---|---|---|
| ● Objective<br>● Symptom when out of adjustment | To verify that there is no variation in the sensitivity of the tracking photo diode.<br>Play does not start or track search is impossible. | | |
| ● Measurement Instrument Connections | Connect the oscilloscope to CN8201, Pin2 (TE) and GND is to CN8201, Pin4 (VC).<br>This connection may be via a low pass filter.<br>[Settings] 50mV/division<br>5ms/division<br>DC mode | ● Player State<br>● Adjustment Location<br>● Disc | Test mode, focus and spindle servos closed and tracking servo open.<br>None<br>YEDS−7 |

[Procedure]

1. Move the pickup to midway across the disc (R=35mm) with the FORWARD/TRACK SEARCH + ▷▷ ▷▷] key or REVERSE [◁◁ ◁◁ − key.
2. Press the DOLBY NR ▯▯ key, then the START ◁ ▷ key in that order to close the focus servo then the spindle servo.
3. Line up the bright line (ground) at the center of the oscilloscope screen and put the oscilloscope into DC mode.
4. Supposing that the positive amplitude of the tracking error signal at CN8201, pin2 (TE) is (A) and the negative amplitude is (B), the following expression is satisfied.

When $A \geqq B$, $\frac{A-B}{C} \times \frac{1}{2} \leqq 0.1$

When $A < B$, $\frac{B-A}{C} \times \frac{1}{2} \leqq 0.1$

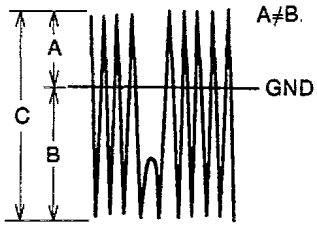


When there is a DC component

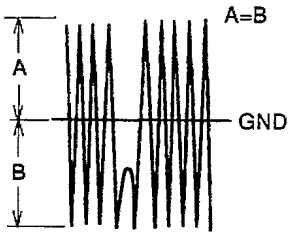


When there is a DC component

## 3. Pickup Radial/Tangential Tilt Adjustment

| | | | |
|---|---|---|---|
| ● Objective | To adjust the angle of the pickup relative to the disc so that the laser beams are shone straight down into the disc for the best read out of the RF signals. | | |
| ● Symptom when out of adjustment | Sound broken; some discs can be played but not others. | | |
| ● Measurement Instrument Connections | Connect the oscilloscope to CN8201, Pin1 (RF) and GND is to CN8201, Pin4 (VC).<br>[Settings] 20mV/division<br>200ns/division<br>AC mode | ● Player State<br>● Adjustment Location<br>● Disc | Test mode, play<br>Pickup radial tilt adjustment screw and tangential tilt adjustment screw<br>8 cm disc<br>[Hewever, those with approx. 20 min of audio signal (music).] |

[Procedure]

1. Press the FORWARD/TRACK SEARCH + ▷▷ ▷▷▯ key or REVERSE ▯◁◁ ◁◁ − key to move the pickup to the external circumference of the disc.
   Press the DOLBY NR ▯▯ key, the START ◁ ▷ key twice in that order to close the respective servos and put the player into play mode.
2. First, adjust the radial tilt adjustment screw with the hexagon wrench (GGK1002) so that the eye pattern (the diamond shape at the center of the RF signal) can be seen the most clearly.
3. Next, adjust the tangential tilt adjustment screw with the hexagon wrench (GGK1002) so that the eye pattern (the diamond shape at the center of the RF signal) can be seen the most clearly (Fig. 3−3).
   ※ The ball-point type hexagonal wrench is used because the disc will get in the way if a normal hexagonal wrench is used.
4. Adjust the radial tilt adjustment screw and the tangential tilt adjustment screw again so that the eye pattern can be seen the most clearly. As necessary, adjust the two screws alternately so that the eye pattern can be seen the most clearly.
5. When the adjustment is completed, lock the radial and tangential adjustment screw.

*Note: Radial and tangential mean the directions relative to the disc shown in Fig. 3−2.*

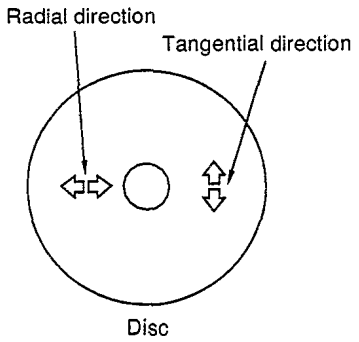


Fig. 3−2

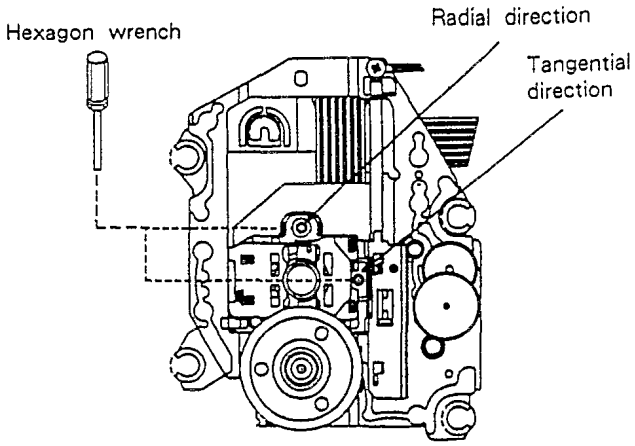

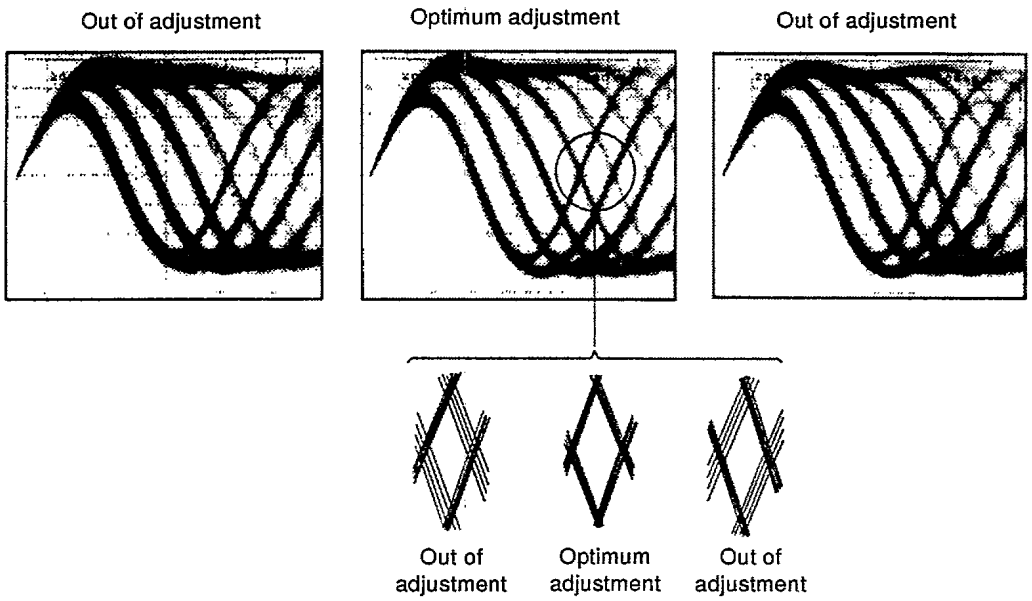


Fig. 3−3 Eye Pattern

## 4. RF Level Verification

| | | | |
|---|---|---|---|
| ● Objective | To verify the playback RF signal amplitude. | | |
| ● Symptom when out of adjustment | No play or no search | | |
| ● Measurement Instrument Connections | Connect the oscilloscope to CN8201, Pin1 (RF) and GND is to CN8201, Pin4 (VC).<br>[Settings] 50mV/division<br>10ms/division<br>AC mode | ● Player State<br>● Adjustment Location<br>● Disc | Test mode, play<br>None<br>YEDS−7 |

[Procedure]

1. Move the pickup to midway across the disc (R=35mm) with the FORWARD/TRACK SEARCH + ▷▷ ▷▷⌷ key or REVERSE ⌷◁◁ ◁◁ − key, then press the DOLBY NR ◻◻ key, the START ◁ ▷ key twice in that order to close the respective servos and put the player into play mode.
2. Verify the RF signal amplitude is 1.2Vp−p±0.2V.

## 5. Focus Servo Loop Gain Adjustment

| | | | |
|---|---|---|---|
| ● Objective | To optimize the focus servo loop gain. | | |
| ● Symptom when out of adjustment | Playback does not start or focus actuator noisy. | | |
| ● Measurement Instrument Connections | See Fig. 3−4.<br><br>[Settings]<br>CH1<br>20mV／division<br>X−Y mode<br>CH2<br>5mV／division | ● Player State<br><br>● Adjustment Location<br><br>● Disc | Test mode, play<br><br>VR8152 (FOCUS)<br><br>YEDS−7 |

[Procedure]

1. Set the AF generator output to 1.2kHz and 1Vp−p.
2. Press the FORWARD／TRACK SEARCH + ▷▷ ▷▷▯ key or REVERSE ▯◁◁ ◁◁ − key to move the pickup to halfway across the disc (R=35mm), then press the DOLBY NR ▯▯ key, the START ◁ ▷ key twice in that order to close the corresponding servos and put the player into play mode.
3. Adjust VR8152 (FOCUS) so that the Lissajous waveform is symmetrical about the X axis and the Y axis.

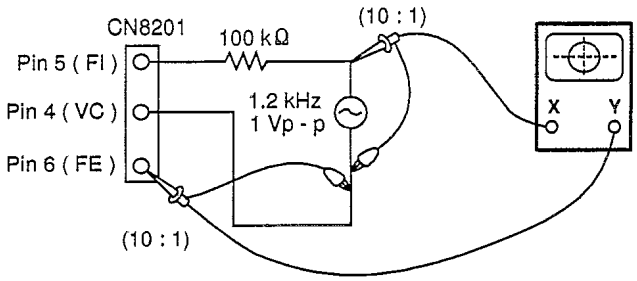


Fig. 3−4

Focus Gain Adjustment

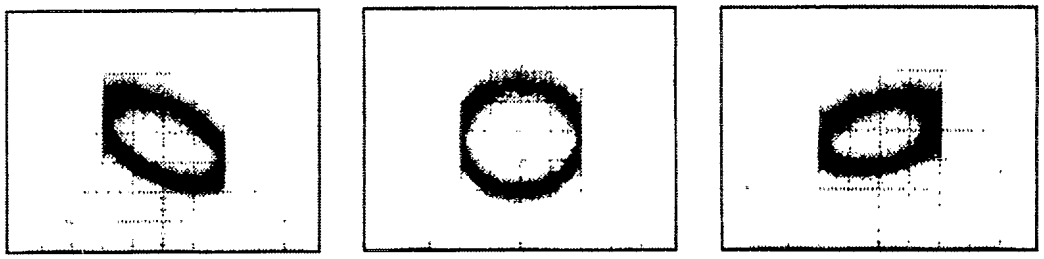

Higher gain　　Optimumr gain　　Lower gain

## 6. Tracking Servo Loop Gain Adjustment

| | | | |
|---|---|---|---|
| ● Objective | To optimize the tracking servo loop gain. | | |
| ● Symptom when out of adjustment | Playback does not start, during searches the actuator is noisy, or tracks are skipped. | | |
| ● Measurement Instrument Connections | See Fig. 3−5.<br><br>[Settings]<br>CH1<br>50mV／division<br>X−Y mode<br>CH2<br>20mV／division | ● Player State<br><br>● Adjustment Location<br><br>● Disc | Test mode, play<br><br>VR8151 (TRACKING)<br><br>YEDS−7 |

[Procedure]

1. Set the AF generator output to 1.2kHz and 2Vp−p.
2. Press the FORWARD／TRACK SEARCH + ▷▷ ▷▷▯ key or REVERSE ▯◁◁ ◁◁ − key to move the pickup to halfway across the disc (R=35mm), then press the DOLBY NR ▯▯ key, the START ◁ ▷ key twice in that order to close the corresponding servos and put the player into play mode.
3. Adjust VR8151 (TRACKING) so that the Lissajous waveform is symmetrical about the X axis and the Y axis.

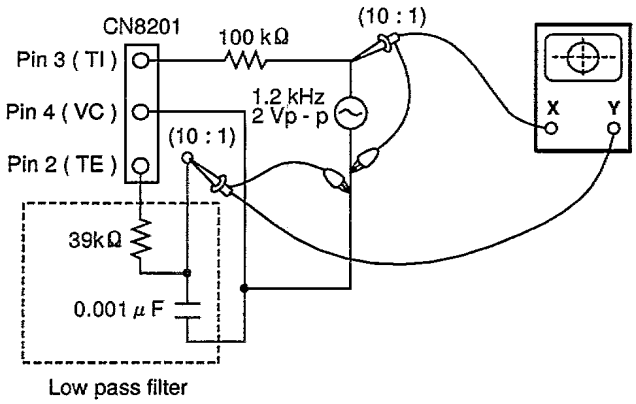


Fig. 3−5

Tracking Gain Adjustment

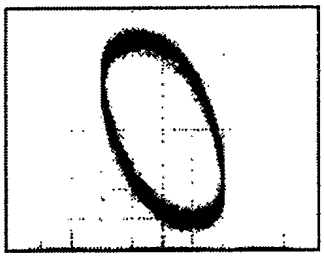

Higher gain

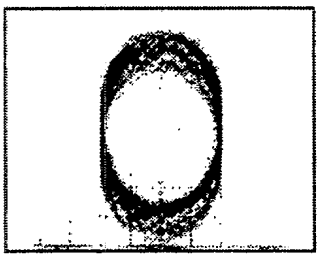

Optimumr gain

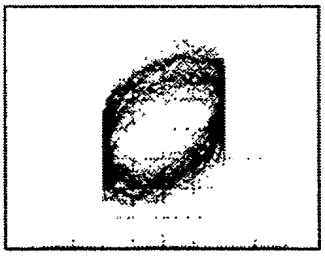

Lower gain

# 6. IC INFORMATION

- *The information shown in the list is basic information and may not correspond exactly to that shown in the schematic diagrams.*

## ■ PDG148B (IC1901 : DISPLAY ASSY)

### ● Display Control Micro-computer

- Pin Assignment (Top view)

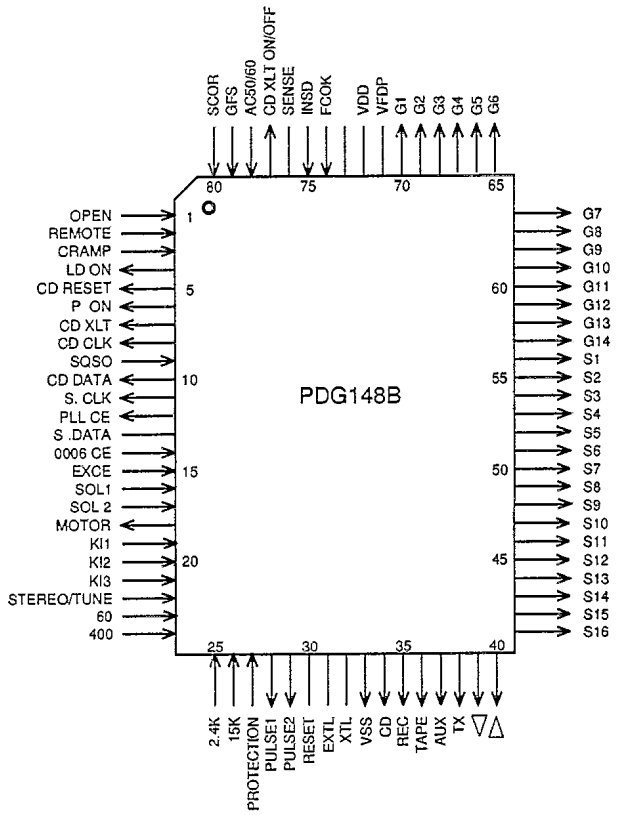


### ● Pin Function

| No. | Pin Name | I/O | Description | ACT |
|---|---|---|---|---|
| 1 | OPEN | I | Tray open acknowledge | L |
| 2 | REMOTE | I | Remote control signal input | |
| 3 | CLAMP | I | CD clump acknowledge | L |
| 4 | $\overline{\text{LD ON}}$ | O | Laser diode light up | L |
| 5 | CD RESET | O | Decoder (2508) reset | L |
| 6 | P. ON | O | System power | H |
| 7 | CD XLT | O | Latch after decoder transfer | |
| 8 | CD CLK | O | Decoder clock | |
| 9 | SQSO | I | Disc time information | H |
| 10 | CD DATA | O | Decoder data | |
| 11 | S. CLK | O | PLL、PM0006、4094 clock | |
| 12 | PLL CE | O | PLL Enable/Request | |
| 13 | S. DATA | O | PLL、PM0006、4094 data | |
| 14 | 0006CE | O | 0006 Enable/Request | |
| 15 | EXCE | O | BU4094 Enable/Request | |
| 16 | SOL1 | O | Deck mechanism Ⅰ solenoid control | H |
| 17 | SOL2 | O | Deck mechanism Ⅱ solenoid control | H |
| 18 | MOTOR | O | MOTOR ON/OFF | L |
| 19 | KI1 | I | Key return input Ⅰ | H |
| 20 | KI2 | I | Key return input Ⅱ | H |
| 21 | KI3 | I | Key return input Ⅲ | H |
| 22 | STEREO/ TUNE | I | 0 — 2.5 — 5.0<br>STEREO/TUNE TUNE | |
| 23 | 60 | I | Detection signal input for spectrum analizer | |
| 24 | 400 | I | | |
| 25 | 2.4K | I | | |
| 26 | 15K | I | | |
| 27 | PROTECTION | I | Power IC protection circuit. Standby at 1.0V. Indication during protection operation. | H |
| 28 | PULSE1 | I | Deck mechanism Ⅰ operation acknowledge | H |
| 29 | PULSE2 | I | Deck mechanism Ⅱ operation acknowledge | H |
| 30 | RESET | I | Reset input | |
| 31 | EXTL | I | Connected to oscillator (8MHz) | |
| 32 | XTL | I | | |
| 33 | VSS | – | Connected to GND | |
| 34 | CD | O | Function LED | L |
| 35 | REC | O | | |

| No. | Pin Name | I/O | Description | ACT |
|---|---|---|---|---|
| 36 | TAPE | O | Function LED | L |
| 37 | AUX | O | | |
| 38 | TX | O | | |
| 39 | ◁ | O | | |
| 40 | ▷ | O | | |
| 41 \| 56 | S16 \| S1 | O | FL segment output／Key scan output | |
| 57 \| 70 | G14 \| G1 | O | FL grid output | |
| 71 | VFDP | – | Connected to −30V | |
| 72 | VDD | – | Connected to +5V | |
| 73 | | – | Connected to +5V | |
| 74 | FCOK | I | Decoder monitor H: FOCUS OK | H |
| 75 | INSD | I | Pickup home position acknowledge | L |
| 76 | SENSE | I | Decoder monitor | |
| 77 | CD XLT ON/OFF | O | XTAL ON/OFF | L/H |
| 78 | AC50/60 | I | AC Clock (reading power supply frequency) | |
| 79 | GFS | I | Decoder monitor Rotation speed frame check | H: OK |
| 80 | SCOR | I | Decoder monitor Q data interrupt signal | H |

## ■ TDA7265 (IC1201: AF ASSY)

● **25W+25W Stereo Amplifier with Mute & ST-BY**

● Pin Assignment (Top view)

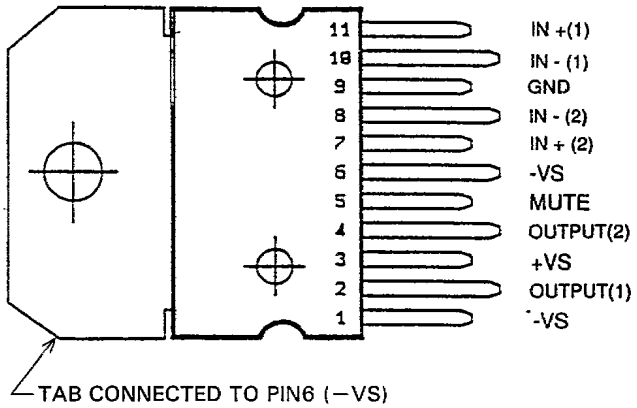


● Block Diagram

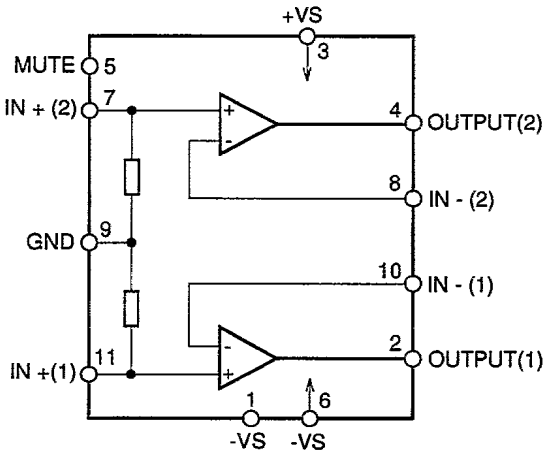

## ■ BU4094BCF (IC1981: AF ASSY)

● **Expander Ⅰ**

● Pin Function

| No. | Pin Name | I/O | Description | ACT |
|---|---|---|---|---|
| 1 | ST | I | STROB | |
| 2 | DT | I | DATA | |
| 3 | CK | I | CLOCK | |
| 4 | PB/REC | O | Dolby IC (CXA1101P)<br>Switching PB/REC<br>H: PB L: REC | |
| 5 | ON/OFF | O | Dolby IC (CXA1101P)<br>□□ ON/OFF H: OFF L: ON | |
| 6 | PB 1/$\overline{2}$ | O | Switching playback Ⅰ／Ⅱ<br>H: Ⅰ, L: Ⅱ | |
| 7 | REC MUTE | O | REC mute | H |
| 8 | VSS | – | GND | |
| 9 | Qs | | | |
| 10 | Q's | | | |
| 11 | BIAS CONT | O | Bias ON/$\overline{\text{OFF}}$ | H |
| 12 | BEAT CUT | O | Beat cut ON/$\overline{\text{OFF}}$ | H |
| 13 | S. MUTE | O | System mute | L |
| 14 | | O | Not used | |
| 15 | OE | | | |
| 16 | VDD | – | +5V power supply | |

## ■ BU4094BCF (IC1982: AF ASSY)

● **Expander Ⅱ**

● Pin Function

| No. | Pin Name | I/O | Description | ACT |
|---|---|---|---|---|
| 1 | ST | I | STROB | |
| 2 | DT | I | DATA | |
| 3 | CK | I | CLOCK | |
| 4 | A | O | Switching function | |
| 5 | B | O | | |
| 6 | INH | O | | |
| 7 | L IN | O | Tray load in | H |
| 8 | VSS | – | GND | |
| 9 | Qs | | | |
| 10 | Q's | | | |
| 11 | DOWN | O | Volume UP/DOWN | |
| 12 | UP | O | | |
| 13 | MONO | O | TX Execution MONO | H |
| 14 | LOUT | O | Tray load out | H |
| 15 | OE | | | |
| 16 | VDD | – | +5V power supply | |

Switching function

| | A | B | INH |
|---|---|---|---|
| TX | L | L | L |
| TAPE | L | H | L/(H) |
| CD | H | L | L |
| AUX | H | H | L |

Function Tape: INH H

Volume UP/DOWN

| | No. 11 | No. 12 |
|---|---|---|
| UP | H | L |
| DOWN | L | H |
| STOP | L | L |

# 7. FL INFORMATION

## ■ AAV7012 (V1901: DISPLAY ASSY)

### ● FL Tube

● Grid Assignment

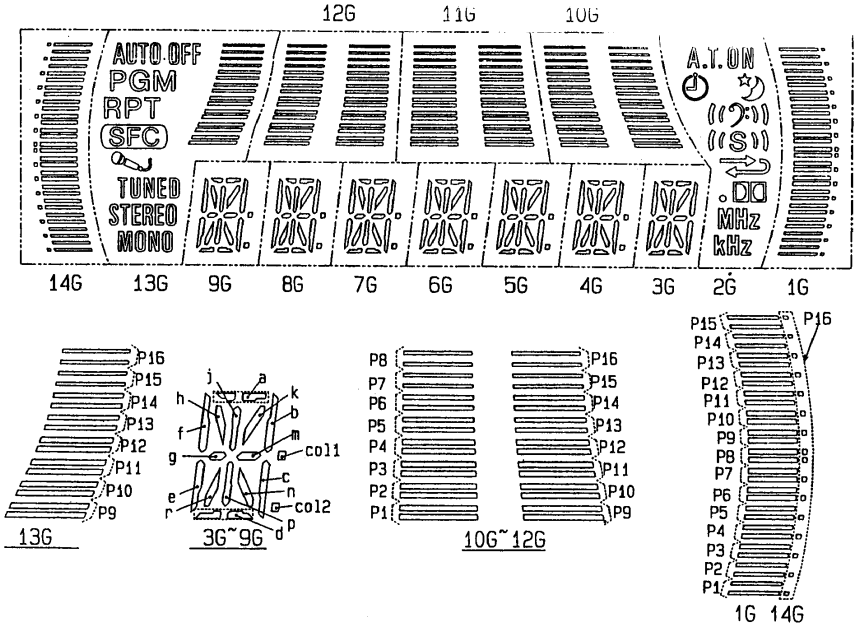


● Segment Assignment

| | 14G | 13G | 12G | 11G | 10G | 9G | 8G | 7G | 6G | 5G | 4G | 3G | 2G | 1G |
|---|---|---|---|---|---|---|---|---|---|---|---|---|---|---|
| S1 | P1 | RPT | P1 | P1 | P1 | m | m | m | m | m | m | m | | P1 |
| S2 | P2 | STEREO | P2 | P2 | P2 | g | g | g | g | g | g | g | | P2 |
| S3 | P3 | PGM | P3 | P3 | P3 | c | c | c | c | c | c | c | | P3 |
| S4 | P4 | AUTO OFF | P4 | P4 | P4 | r | r | r | r | r | r | r | | P4 |
| S5 | P5 | MONO | P5 | P5 | P5 | n | n | n | n | n | n | n | | P5 |
| S6 | P6 | TUNED | P6 | P6 | P6 | p | p | p | p | p | p | p | | P6 |
| S7 | P7 | | P7 | P7 | P7 | e | e | e | e | e | e | e | MHz | P7 |
| S8 | P8 | SEC | P8 | P8 | P8 | d | d | d | d | d | d | d | kHz | P8 |
| S9 | P9 | P9 | P9 | P9 | P9 | a | a | a | a | a | a | a | | P9 |
| S10 | P10 | P10 | P10 | P10 | P10 | b | b | b | b | b | b | b | | P10 |
| S11 | P11 | P11 | P11 | P11 | P11 | j | j | j | j | j | j | j | | P11 |
| S12 | P12 | P12 | P12 | P12 | P12 | k | k | k | k | k | k | k | | P12 |
| S13 | P13 | P13 | P13 | P13 | P13 | h | h | h | h | h | h | h | | P13 |
| S14 | P14 | P14 | P14 | P14 | P14 | f | f | f | f | f | f | f | | P14 |
| S15 | P15 | P15 | P15 | P15 | P15 | col 1 | col 1 | col 1 | col 1 | col 1 | col 1 | | | P15 |
| S16 | P16 | P16 | P16 | P16 | P16 | col 2 | col 2 | col 2 | col 2 | col 2 | col 2 | | A.T.ON | P16 |

● Pin Assignment

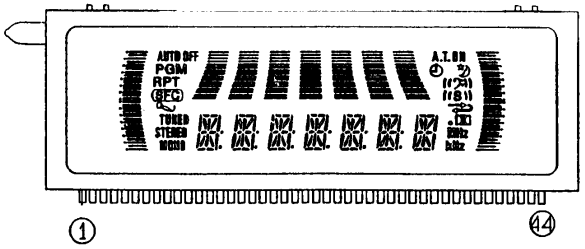


● Pin Connection

| Pin No. | 1 | 2 | 3 | 4 | 5 | 6 | 7 | 8 | 9 | 10 | 11 | 12 | 13 | 14 | 15 | 16 | 17 | 18 | 19 | 20 | 21 | 22 |
|---|---|---|---|---|---|---|---|---|---|---|---|---|---|---|---|---|---|---|---|---|---|---|
| Assignment | F1 | F1 | NL | G14 | G13 | G12 | G11 | G10 | G1 | NL | NL | NL | NL | NL | NL | NL | NL | G9 | G8 | G7 | G6 | G5 |

| Pin No. | 23 | 24 | 25 | 26 | 27 | 28 | 29 | 30 | 31 | 32 | 33 | 34 | 35 | 36 | 37 | 38 | 39 | 40 | 41 | 42 | 43 | 44 |
|---|---|---|---|---|---|---|---|---|---|---|---|---|---|---|---|---|---|---|---|---|---|---|
| Assignment | G4 | G3 | G2 | S9 | S10 | S11 | S12 | S13 | S14 | S8 | S7 | S6 | S5 | S4 | S3 | S2 | S1 | S15 | S16 | NL | F2 | F2 |

F1, F2:Filament G1~G14:Grid S1~S16:Anode NL:No Lead NP:No Pin

# 8. FOR MEXK/EA, MEXK/EB AND SD TYPES

*NOTES :*

- *Parts marked by "NSP" are generally unavailable because they are not in our Master Spare Parts List.*
- *The ⚠ mark found on some component parts indicates the importance of the safety factor of the part. Therefore, when replacing, be sure to use parts of identical designation.*
- *Parts marked by "◉" are not always kept in stock. Their delivery time may be longer than usual or they may be unavailable.*
- *When ordering resistors, first convert resistance values into code form as shown in the following examples.*

*Ex. 1* *When there are 2 effective digits (any digit apart from 0), such as 560 ohm and 47k ohm (tolerance is shown by J = 5%, and K = 10%).*

*560Ω → 56 × 10¹ → 561 ····· RD1/8PM[5][6][1] J*

*47kΩ → 47 × 10³ → 473 ····· RD1/4PS[4][7][3] J*

*0.5Ω → 0R5 ····· RN2H[0][R][5] K*

*1Ω → 010 ····· RS1P[0][1][0] K*

*Ex. 2* *When there are 3 effective digits (such as in high precision metal film resistors).*

*5.62kΩ → 562 × 10¹ → 5621 ····· RM1/4PC[5][6][2][1] F*

MEXK/EA, MEXK/EB, SD types and NBXK type have the same construction except for the following :

| Mark | Symbol & Description | Part No. | | | | Remarks |
|---|---|---|---|---|---|---|
| | | NBXK type | MEXK/EA type | MEXK/EB type | SD type | |
| NSP | COMPLEX assy | AWK7113 | AWK7113 | AWK7113 | AWK7116 | |
| | AF assy | AWZ7501 | AWZ7501 | AWZ7501 | AWZ7503 | |
| | DISPLAY assy | AWZ7504 | AWZ7504 | AWZ7504 | AWZ7506 | |
| | PRIMARY assy | AWZ7509 | AWZ7509 | AWZ7509 | AWZ7512 | |
| NSP | HEADPHONE assy | AWZ7514 | AWZ7514 | AWZ7514 | AWZ7516 | |
| | FM/AM TUNER MODULE | AXQ3213 | AXQ3213 | AXQ3213 | AXQ1012 | |
| ⚠ | Voltage selector | Not used | Not used | Not used | AKX-507 | *1 |
| ⚠ | Power transformer (AC220–230V) | ATS7054 | ATS7054 | ATS7054 | Not used | |
| ⚠ | Power transformer (AC110–115V/120–127V/220–230V/240V) | Not used | Not used | Not used | ATS7056 | |
| ⚠ | AC power cord | ADG1148 | ADG1138 | ADG1138 | PDG1013 | |
| ⚠ | Fuse (T5A) | AEK1046 | Not used | Not used | Not used | |
| ⚠ | Fuse (T500mA, FU2) | Not used | Not used | Not used | AEK1051 | *1 |
| | Front panel | AZN7207 | AZN7207 | AZN7207 | AZN7203 | |
| | Cassette door L | AZN7208 | AZN7208 | AZN7208 | AZN7204 | |
| | Cassette door R | AZN7209 | AZN7209 | AZN7209 | AZN7205 | |
| | Mic knob | Not used | Not used | Not used | AAB7052 | *1 |
| NSP | Chassis | ANA7020 | ANA7020 | ANA7020 | ANA7017 | |
| | Bonnet | AZN7210 | AZN7210 | AZN7210 | AZN7206 | |
| | Rear panel | ANC7215 | ANC7216 | ANC7216 | ANC7213 | |
| | Eject spring L | ABH7028 | ABH7028 | ABH7028 | RBH1411 | |
| | Eject spring R | ABH7029 | ABH7029 | ABH7029 | RBH1412 | |
| | Door spring L | ABH7060 | ABH7060 | ABH7060 | ABH7058 | |
| | Door spring R | ABH7061 | ABH7061 | ABH7061 | ABH7059 | |
| | Connector assy (5P) | ADX7045 | ADX7045 | ADX7045 | RKP1582 | |
| | Connector assy (3P) | ADX7046 | ADX7046 | ADX7046 | RKP1583 | |
| | Eject arm L | AMR7024 | AMR7024 | AMR7024 | AMR7020 | |
| | Eject arm R | AMR7025 | AMR7025 | AMR7025 | AMR7021 | |
| | CD holder L | ANG7023 | ANG7023 | ANG7023 | ANG7018 | |
| | CD holder R | ANG7024 | ANG7024 | ANG7024 | ANG7019 | |

*Note *1: Refer to "2. EXPLODED VIEWS, PACKING AND PARTS LIST".*



| Mark | Symbol & Description | Part No. | | | | Remarks |
|---|---|---|---|---|---|---|
| | | NBXK type | MEXK/EA type | MEXK/EB type | SD type | |
| | Power pack holder | ANG7025 | ANG7025 | ANG7025 | ANG7020 | |
| NSP | Heat sink | ANH7015 | ANH7015 | ANH7015 | ANH7014 | |
| | FM antenna | ADH1019 | ADH1019 | ADH1019 | ADH1016 | |
| NSP | Battery (R03, AAA) | PEM1004 | PEM1004 | PEM1004 | VEM-009 | |
| | Packing case | AHD7135 | AHD7182 | AHD7182 | AHD7126 | |
| | Front pad | AHA7054 | AHA7054 | AHA7054 | AHA7052 | |
| | Rear pad | AHA7055 | AHA7055 | AHA7055 | AHA7053 | |
| | Packing sheet | AHG7001 | AHG7001 | AHG7001 | AHG7003 | |
| | Spacer | AHB7006 | Not used | Not used | Not used | |
| | Caution label (G) | VRW-329 | VRW-329 | VRW-329 | Not used | |
| NSP | Caution label (F) | ARW1046 | ARW1046 | ARW1046 | Not used | |
| NSP | Caution label | ARW1050 | ARW1047 | ARW1047 | Not used | |
| | Operating instructions (English) | ARB7033 | Not used | ARB7033 | Not used | |
| | Operating instructions (French/ Swedish/ Spanish/Portuguese) | Not used | Not used | ARC7057 | Not used | |
| | Operating instructions (German/ Italian) | Not used | ARC7053 | Not used | Not used | |
| | Operating instructions (French/Dutch) | Not used | ARC7054 | Not used | Not used | |
| | Operating instructions (English/Spanish/Chinese) | Not used | Not used | Not used | ARE7034 | |
| | Quick set up guide (English) | ARB7039 | Not used | Not used | Not used | |

## AF Assy

AWZ7503 and AWZ7501 have the same construction except for the following :

| Mark | Symbol & Description | Part No. | | Remarks |
|---|---|---|---|---|
| | | AWZ7501 | AWZ7503 | |
| | C1984, C2507 | Not used | CKSQYB102K50 | *2 |
| | C1220 | CKCYB103K50 | CKSQYB103K50 | |
| | C2202 | Not used | CEAS100M50 | *2 |
| | C2213, C2214 | CEAS221M10 | CEAS221M16 | |
| | R1996 | Not used | RS1/10S222J | *2 |
| | R2000 | Not used | RS1/6PM222J | *2 |
| | R2213 | Not used | RS1/10S102J | *2 |
| | R2218 | RS1/10S102J | Not used | |
| | R9019 | Not used | RS1/10S000J | *2 |

*Note *2: Refer to "SCH-3 to SCH-5".*

## PRIMARY Assy

AWZ7512 and AWZ7509 have the same construction except for the following :

| Mark | Symbol & Description | Part No. | | Remarks |
|---|---|---|---|---|
| | | AWZ7509 | AWZ7512 | |
| | H1103, H1104 Fuse holder | Not used | VKR1001 | |

## DISPLAY Assy

AWZ7506 and AWZ7504 have the same construction except for the following :

| Mark | Symbol & Description | Part No. | | Remarks |
|---|---|---|---|---|
| | | AWZ7504 | AWZ7506 | |
| | D9001 | 1SS254 | Not used | |
| | D9008, D9012 | Not used | 1SS254 | *3 |
| | C2501, C2508 | Not used | CKSQYB473K50 | *3 |
| | C2502 | Not used | CEAS010M50 | *3 |
| | C2503 | Not used | CEAS100M50 | *3 |
| | C2504 | Not used | CKSQYB821K50 | *3 |
| | VR2501 (10k–B) | Not used | ACS1097 | *3 |
| | R2502 | Not used | RS1/10S821J | *3 |
| | R2503 | Not used | RS1/10S104J | *3 |
| | R2504 | RS1/10S103J | RS1/10S332J | |
| | R2506 | Not used | RS1/10S152J | *3 |
| | R2507 | RS1/10S000J | RS1/10S683J | |
| | R2508 | Not used | RS1/10S101J | *3 |

*Note *3: Refer to "SCH–6".*

## HEADPHONE Assy

AWZ7516 and AWZ7514 have the same construction except for the following :

| Mark | Symbol & Description | Part No. | | Remarks |
|---|---|---|---|---|
| | | AWZ7514 | AWZ7516 | |
| | L2501 | Not used | LAU2R2J | *4 |
| | L2502 | LAU100J | LAU2R2J | |
| | C2505 | Not used | CKSQYF104Z50 | *4 |
| | CN2501 | Not used | AKN1028 | *4 |

*Note *4: Refer to "SCH–5".*

## FM/AM TUNER MODULE

AXQ1012 and AXQ3213 have the same construction except for the following :

| Mark | Symbol & Description | Part No. | | Remarks |
|---|---|---|---|---|
| | | AXQ3213 | AXQ1012 | |
| | C6202 (1μF/16V) | Not used | ACG1051 | *5 |
| | C6230 | CKSQYB273K50 | CKSQYB333K50 | |
| | C6232 | CKSYB273K50 | CKSYB333K50 | |
| | C6251 | CKSYB822K50 | CKSYB472K50 | |
| | C6252 | CKSQYB822K50 | CKSQYB472K50 | |
| | C6268 | Not used | CCSQCH101J50 | *5 |
| | C6269 | CCSQCH101J50 | Not used | |
| | C6270 (1μF/16V) | ACG1051 | Not used | |
| | R6288 | RS1/10S000J | RS1/10S471J | |
| | BN6201 Terminal 2P with PAL | AKA1017 | Not used | |
| | BN6201 Terminal 4P | Not used | AKA1016 | *5 |

*Note *5: Refer to "SCH–2".*

# 9. PANEL FACILITIES

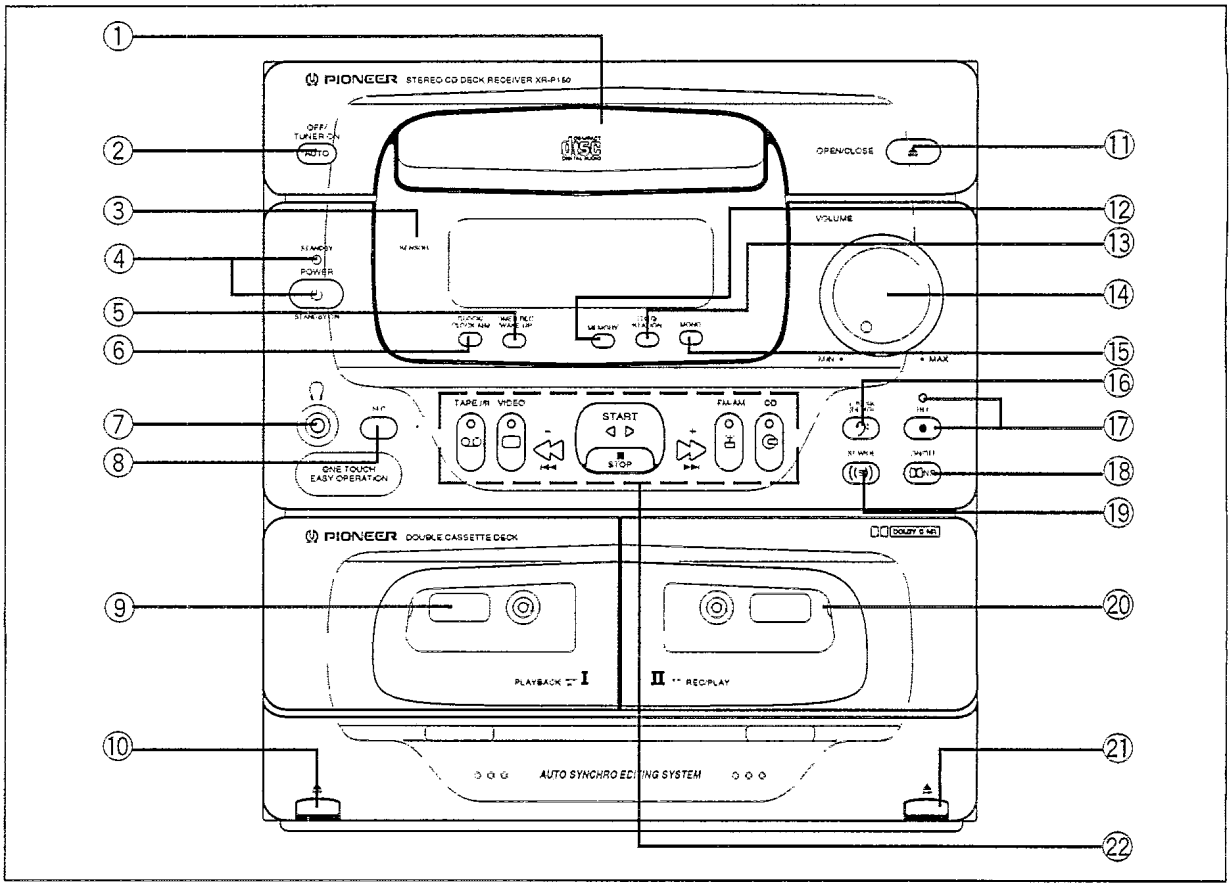


① **CD Disc tray**

② **AUTO button**

③ **Remote sensor**

④ **POWER STANDBY/ON switch and STANDBY indicator**

This is the switch for electric power.

ON: When set to the ON position, power is supplied and the unit becomes operational.

STANDBY: When set to the STANDBY position, the main power flow is cut and the unit is no longer fully operational. A minute flow of power feeds the unit to maintain operation readiness. (The STANDBY indicator lights.)

⑤ **TIMER REC/WAKE-UP button**

⑥ **CLOCK/CLOCK ADJ button**

⑦ **Headphones jack**

⑧ **SFC button**

Each time this button is pressed, the mode changes in the following sequence:

→ HALL → DISCO → MOVIE →
off ← KARAOKE ←

***NOTE:***

*If KARAOKE is selected, the vocal part in songs is muted and only the instrumental accompaniment (backing) is played.*

⑨ **TAPE I cassette door**

⑩ **TAPE I eject button (▲)**

⑪ **CD OPEN/CLOSE button (▲)**

⑫ **MEMORY button**

⑬ **FREQ/STATION button**

⑭ **VOLUME control**

⑮ **MONO button**

⑯ **P.BASS (DEMO) button**

⑰ **Rec standby button and indicator (●)**

⑱ **Dollby* NR ON/OFF button**

Each time this button is pressed, the Dolby NR system turns on and off.

⑲ **ST.WIDE button**

⑳ **TAPE II cassette door**

㉑ **TAPE II eject button (▲)**

㉒ **Function buttons (Refer to p. 65)**

*

- *Dolby noise reduction manufactured under license from Dolby Laboratories Licensing Corporation.*
- *"DOLBY" and the double-D symbol are trademarks of Dolby Laboratories Licensing Corporation.*

## Function button section

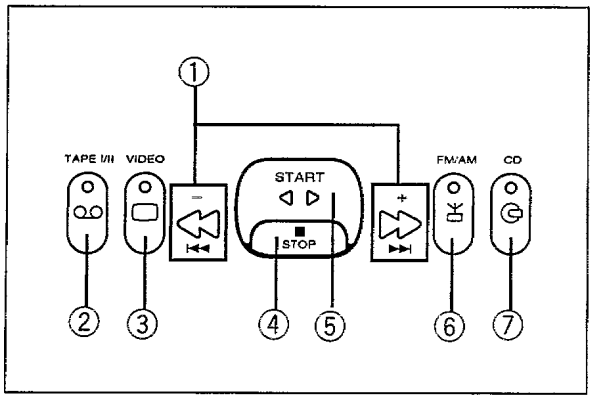


① ◁◁ , ▷▷ **buttons**
② **TAPE (I/II) function button and indicator**
③ **VIDEO function button and indicator**
④ **STOP button (■)**
⑤ **START button (◄ ►)**
⑥ **Tuner (FM/AM) function button and indicator**
⑦ **CD function button and indicator**

- **Roles of the common operation buttons (The rules of the buttons vary depending on the input functions as shown below.)**

**During CD input**
START: Play/pause button
STOP: Stop button
▷▷: Fast forward/track search button
◁◁: Fast reverse/track search button

**During cassette deck input**
START: Play button/Tape transport direction
STOP: Stop button
▷▷: Fast forward button
◁◁: Rewind button

**During tuner operation**
▷▷: Frequency Up button
◁◁: Frequency Down button

## REMOTE CONTROL UNIT

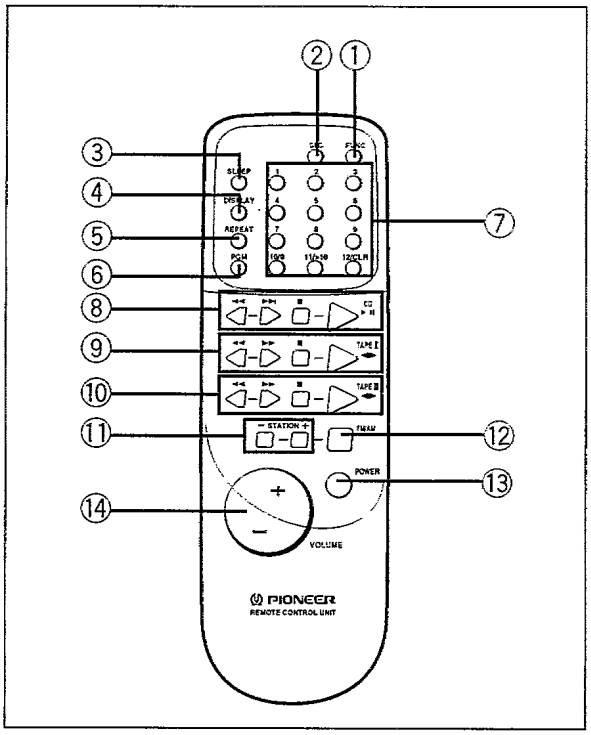


① **Function button (FUNC)**
Each time this button is pressed, the function changes in the following sequence:
→ TAPE → VIDEO → TUNER → CD →

② **SFC mode button**
③ **SLEEP timer button**
④ **DISPLAY button**
⑤ **REPEAT button**
⑥ **PGM button**
⑦ **Number buttons**
These buttons are used for selecting track numbers of a CD and for scanning preset stations.
⑧ **CD operation buttons**
**(Track search ⏮ ⏭, Stop ■, Play/Pause ►/II)**
⑨ **TAPE I operation buttons**
**(Fast ◄◄ ►►, Stop ■, Play ◄ ►)**
⑩ **TAPE II operation buttons**
**(Fast ◄◄ ►►, Stop ■, Play ◄ ►)**
⑪ **STATION – (down), + (up) buttons**
Before operation, memorize broadcast stations with the STATION –, + buttons.
+ .... Stations change in order in the upward direction.
– .... Stations change in order in the downward direction.
⑫ **FM/AM band button**
⑬ **POWER button**
⑭ **VOMUME + (up), – (down) button**
Increase/decrease the sound volume of the unit.

# 10. SPECIFICATIONS

## STEREO CD CASSETTE DECK RECEIVER

### Amplifier section

Continuous Power Output (RMS) ..... 25 W + 25 W
(1 kHz, T.H.D. 10 % 8 )
Continuous Power Output (DIN) ..... 20 W + 20 W
(1 kHz, T.H.D. 1 % 8 )

- Above specificatoins are for when power supply is 230 V.

### FM/AM Tuner section

**FM tuner section**

Frequency Range ..... 87.5 MHz to 108 MHz
Antenna input ..... 75 unbalanced

**AM tuner section**

Frequency Range
With 9 kHz step ... ..... 531 kHz to 1,602 kHz
Antenna ..... ..... ..... Loop antenna

### CD section

Type ..... Compact disc digital audio system
Wow and Flutter ..... ..... Limit of measurement
(±0.001 % W.PEAK) or less

### Cassette deck section

Systems ..... 4 track, 2-channel stereo
Heads ..... Recording/playback head x 1
Playback head x 1
Erasing head x 1
Motor ..... ..... ..... DC servo motor x 1
Tape type ... ..... TYPE I (Normal) tape

### Miscellaneous

Power Requirements ... AC 230 V AC, 50/60 Hz (U K model)
AC 220 - 230 V AC, 50/60 Hz (European model)
Power Consumption ..... ..... ..... ..... 100 W
Dimensions ..... 240 (W) x 270 (H) x 293 (D) mm
Weight (without package) ..... 5.3 kg

### Accesories

Operating instructions ..... 1
Remote control unit .... ..... .. ..... ..... ..... 1
AAA/R03 dry cell batteries ..... ..... ..... 2
FM T-type antenna ..... ..... .. .. ..... ..... ... 1
AM loop antenna ..... ..... 1

***NOTE:***
*Specifications and design subject to possible modification without notice, due to improvement.*